This is a digital copy of a book that was preserved for generations on library shelves before it was carefully scanned by Google as part of a project to make the world's books discoverable online.

It has survived long enough for the copyright to expire and the book to enter the public domain. A public domain book is one that was never subject to copyright or whose legal copyright term has expired. Whether a book is in the public domain may vary country to country. Public domain books are our gateways to the past, representing a wealth of history, culture and knowledge that's often difficult to discover.

Marks, notations and other marginalia present in the original volume will appear in this file - a reminder of this book's long journey from the publisher to a library and finally to you.

Usage guidelines

Google is proud to partner with libraries to digitize public domain materials and make them widely accessible. Public domain books belong to the public and we are merely their custodians. Nevertheless, this work is expensive, so in order to keep providing this resource, we have taken steps to prevent abuse by commercial parties, including placing technical restrictions on automated querying.

We also ask that you:

+ *Make non-commercial use of the files* We designed Google Book Search for use by individuals, and we request that you use these files for personal, non-commercial purposes.

+ *Refrain from automated querying* Do not send automated queries of any sort to Google's system: If you are conducting research on machine translation, optical character recognition or other areas where access to a large amount of text is helpful, please contact us. We encourage the use of public domain materials for these purposes and may be able to help.

+ *Maintain attribution* The Google "watermark" you see on each file is essential for informing people about this project and helping them find additional materials through Google Book Search. Please do not remove it.

+ *Keep it legal* Whatever your use, remember that you are responsible for ensuring that what you are doing is legal. Do not assume that just because we believe a book is in the public domain for users in the United States, that the work is also in the public domain for users in other countries. Whether a book is still in copyright varies from country to country, and we can't offer guidance on whether any specific use of any specific book is allowed. Please do not assume that a book's appearance in Google Book Search means it can be used in any manner anywhere in the world. Copyright infringement liability can be quite severe.

About Google Book Search

Google's mission is to organize the world's information and to make it universally accessible and useful. Google Book Search helps readers discover the world's books while helping authors and publishers reach new audiences. You can search through the full text of this book on the web at `http://books.google.com/`

Digitized by Google

Library
of the
University of Wisconsin

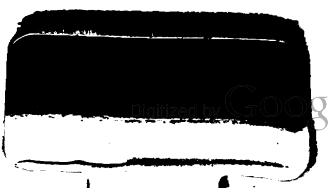

Digitized by Google

Digitized by Google

Digitized by Google

WORM GEARING

Digitized by Google

McGraw-Hill Book Company

Publishers of Books for

Electrical World
The Engineering and Mining Journal
Engineering Record
Engineering News
Railway Age Gazette
American Machinist
Signal Engineer
American Engineer
Electric Railway Journal
Coal Age
Metallurgical and Chemical Engineering
Power

Digitized by Google

Digitized by Google

Frontispiece.

A Fifteenth Century Worm Gear from an Etching by Albrecht Dürer.

Digitized by Google

WORM GEARING

BY

HUGH KERR THOMAS

M. I. MECH. E., M. A. S. M. E., M. I. A. E.

SECOND EDITION

REVISED AND ENLARGED

McGRAW-HILL BOOK COMPANY, INC.

239 WEST 39TH STREET. NEW YORK

LONDON: HILL PUBLISHING CO., LTD.

6 & 8 BOUVERIE ST., E. C.

1916

Digitized by Google

Copyright, 1913, 1916, by the
McGraw-Hill Book Company, Inc.

THE MAPLE PRESS YORK PA

Digitized by Google

215070
JAN -7 1918
TE
T36
.2

6 9 3 6 9 42

PREFACE TO SECOND EDITION

A second edition of this book having been called for, the opportunity is afforded for making corrections of a few typographical errors, which appeared in the first edition. Part of Chapter IX has been rewritten, and three short appendices added to bring the text abreast of the writer's most recent investigations. It is hoped that the value of the book is thereby considerably enhanced.

H. K. T.

PREFACE TO FIRST EDITION

In the following work an attempt has been made, it is believed for the first time, to deal exhaustively with a little understood branch of applied mechanics. A complete analysis of the principles of the design of worm gearing has been made, and, primarily, this has been treated in its application to the rear axles of automobiles. For a number of years this type of gearing has enjoyed considerable popularity in Great Britain, and its wider use is daily becoming more general.

From his experience with his own staff, as well as with many professional acquaintances, the author believes that the book will give information, which, although possibly possessed by a few engineers, has not hitherto been accessible to the designer and draughtsman in anything like a complete form.

An important use for worm gearing is rapidly developing in connection with the reduction gear of steam turbines for marine propulsion; while these are, mechanically speaking, simpler problems, by reason of their greater stability, than the gears of an automobile, precisely the same rules can be applied, and the same thing may be said of gears for driving line shafting from electric motors.

Digitized by Google

A brief outline of the work was given in two papers contributed by the author to the "Automobile Engineer" for May and June, 1912, and some of the formulæ there published, with much amplification, have been incorporated in the text. The subject is a complicated one, demanding lengthy explanations, but by confining the calculations to the use of elementary algebra and trigonometry, it is hoped that the solution of the various problems has been as far as possible simplified.

The literature on the subject is extremely meagre; where it has been consulted, reference to the author has been given in the text; with very few exceptions, however, the work is entirely original, and the rules given have been in every case referred to practical experiments for verification.

The author wishes to acknowledge many valuable suggestions in the progress of the work from his assistants, John Younger, B. Sc., Lewis P. Kalb, M. E., and C. P. Schwarz, D. Sc., to the former of whom is due the method for determining the width of the worm wheel.

He is also indebited to A. L. Cox for valuable assistance in reading the proofs and preparing the index.

H. KERR THOMAS.

LONDON, *January*, 1913.

Digitized by Google

CONTENTS

	Page
Preface	v
CHAPTER I	
Introductory	1
CHAPTER II	
Choice of Materials and Methods of Manufacture	5
CHAPTER III	
Definitions and Symbols	8
CHAPTER IV	
Preliminary Proportions	13
CHAPTER V	
Pressure Angle and Form of Thread	22
CHAPTER VI	
Strength of Worm Wheel Teeth	34
CHAPTER VII	
Stresses in Worm Gearing	37
CHAPTER VIII	
The Width of the Worm-wheel	47
CHAPTER IX	
The Temperature Coefficient	58
CHAPTER X	
Efficiency of Worm Gearing	63
CHAPTER XI	
General Points of Design of Mounting	76
CHAPTER XII	
Recapitulation of Formulæ Used	81

Digitized by Google

APPENDIX

A. Alternative Method of Calculating Stresses in Worm Gearing 85

B. Efficiency of Worm Gearing 89

C. Reversibility 91

Index 95

Digitized by Google

WORM GEARS

CHAPTER I

INTRODUCTORY.

Worm, or more properly screw, gearing is of great antiquity; the word screw, directly derived from the Danish *scrue*, is defined in the Encyclopædia Britannica (11th edition) as "a cylindrical or conical piece of wood or metal having a groove running spirally round it." Such a spiral was first studied geometrically by Archimedes (287–212 B. C.) and described in his work Περὶ ἑλίκων, which deals in 28 propositions with various mathematical problems arising out of the construction of a helix. Unfortunately but too many inventions of the early engineers have passed out of human knowledge, and the earliest form of worm gearing in which an Archimedian spiral was employed to rotate a toothed wheel is not now on record. We have, however, a series of curious drawings by the German artist, Albrecht Dürer (1471–1528), which were engraved on wood by the Master, to the order of the Emperor Maximillian. It is on record that His Majesty, conceiving for his own aggrandizement a Triumphal Procession, commissioned his favorite painter to prepare designs of the emblematic cars which were intended to figure therein. A number of these designs are still in existence and one is reproduced here in the frontispiece. It will be seen that the vehicle, which is of heroic proportions, is propelled by all four wheels, each actuated by a perfect worm gear. It is thus a "four wheel driven" car in the most modern sense of the word and is at the same time undoubtedly the earliest worm driven vehicle of which any record exists. Unfortunately, we can hardly believe that so ponderous a machine could have ever been propelled by means of such obviously inefficient gearing operated by only "four man power." It is not known

Digitized by Google

whether this remarkable car was ever made, but it is certain from the existing prints that Dürer must have seen, somewhere or other, a worm and wheel from which his elaborate design was copied.

From the fifteenth to the nineteenth century, almost all gearing was made of wood, and in old treatises on gearing, numerous examples of wooden worm gears are illustrated. Several examples of worm-driven traction engines are to be found in the records of the British Patent Office, and more than one are for the propulsion of tram cars, but as we know it to-day, worm gear, which had been used for many years in various forms, was first applied to the purpose of driving the road wheels of automobiles by Mr. F. W. Lanchester, who, employing it in his first cars designed and built before the close of the nineteenth century, has consistently used it ever since. The Brothers Dennis adopted it for 3 1/2-ton commercial vehicles and subsequently for pleasure cars a few years later, and for several years the Lanchester Company and the Dennis Company were the only firms regularly using it. Much opposition to its general adoption existed for years but Lanchester and Dennis holding confidently to their belief in the principle, it began to be realized in England that worm gearing for final drives of automobiles was a serious competitor of bevel gears and could be considered as having passed the experimental stage. Gradually other builders took it up and made it successful in wider use until finally the seal of approval was set by the enormous fleet of vehicles built and owned by the London General Omnibus Company, all driven through this type of gear.

A few attempts, distinguished by lack of self-confidence, were made to use it in the United States, with little success on the part of manufacturers or enthusiasm shown by the public, until the author, who had experimented with it for two years in England, was privileged to introduce it into the United States, in the year 1911, on an extensive scale, as part of the regular product of The Pierce-Arrow Motor Car Company, and its use is now very general in England, on the Continent of Europe, and is rapidly extending in America.

Digitized by Google

Certain obvious advantages have contributed to its adoption in automobiles of all kinds from the lightest pleasure cars to the heaviest commercial vehicles, and, while there is everything to be said in its favor, its design has been surrounded with so much mystery that many have been deterred from adopting it. It is true that some writers have attempted to ventilate the subject, and some mention of it will be found in most works devoted to gearing, but the author has searched in vain for any book treating the whole subject comprehensively. Literature specially devoted to worm gears for automobiles is, indeed, practically non-existent, and, at the best, consists of occasional contributions to technical magazines. Most of such articles omit altogether the fundamental principles, a careful study of which is a necessity if successful result is to be obtained by other methods than mere chance.

Much opposition to the use of worm gearing has been due to a misconception, for which practically all the text-books are responsible, that it is inefficient, and (for automobile work) irreversible; it will presently be shown that it is neither, but mention may be made here of a remarkable kind of gear which appeared in the closing years of the nineteenth century. It was known as the "Globoid Gear" and the supposed excessive friction of an ordinary worm was sought to be overcome by an arrangement of conical rollers mounted upon radial pins around the periphery of the worm wheel; these rollers were meshed by a worm of very large pitch and the gear certainly worked freely in both directions; beyond that, it was very cumbersome, and after a little use noisy. It was never used in automobiles, and is only referred to here to show how the action of this type of gearing has been misrepresented—even to the extent of inducing inventors to develop complicated mechanisms to overcome supposed faults which do not in reality exist.

Since the early days of experiments so much actual experience in daily use with worm gears of all sizes has been possible that it can now be said that something approaching finality has been reached, and the art of making worm gearing has been placed upon a substantial foundation.

Such is, in outline, the history of this most interesting me-

Digitized by Google

chanical device, and with this very brief glance at its early use, we will pass to the consideration of the principles of its design and construction, dealing in as progressive a manner as possible with a subject which is necessarily of a somewhat complex nature.

Digitized by Google

CHAPTER II

CHOICE OF MATERIALS AND METHODS OF MANUFACTURE

At different times, many combinations of metals have been proposed for making worm gears. Some kind of bronze for the wheel and steel for the worm was adopted as the most natural combination for two sliding surfaces working together; the first and most obvious improvement being to case-harden the worm to minimize wear. Rise in the cost of copper and tin suggested the use of other metals for the wheel, and cast iron of various grades, mild steel, and even case-hardened steel were tried for the wheels, all in combinations with and without a hardened worm. For many years, bronze has been used for the worm wheels of elevators driven by a steel worm and it is now generally recognized that case-hardened steel for the worm and phosphor bronze for the wheel cannot be surpassed. It is interesting to note here that manganese bronze is unsuitable, presumably on account of its hardness. The bronze must be very homogeneous and close grained, and great care must be taken to ensure uniformity of mixing, melting and pouring, in order to ensure uniform results. The writer recommends a mixture of the following proportions:

Copper	89
Phosphorous	1
Tin	10

This will have an elastic resistance to crushing amounting to 22,000 lb. per square inch, and to penetration, under a hardened steel point of .125 sq. in. area, of 5000 lb. On the Shore scleroscope, it will give a hardness reading of 15 to 20. Its tensile strength will amount to 35,000 lb. per square inch. With such a metal, a safe working stress of 7000 lb. per square inch may be permitted

Digitized by Google

For the worm, seeing that its shape conduces to great strength, no unusual strength is required in the material, and almost any low carbon case-hardening steel, which can be heat treated without serious distortion, may be employed. Steel for this purpose should contain 3 to 3.5 per cent. nickel and .16 to .18 carbon. In its untreated state, it will give approximately the following physical tests, on a standard 2-in. specimen.

Elastic limit	62,000 lb. per square inch.
Maximum strength	82,000 lb. per square inch.
Elongation	30 per cent.
Reduction	60 per cent.

After machining to size with an allowance of say .003 in. for grinding, it can be subjected to the following heat treatment. Pack in carbonizing material and maintain for eight hours at a temperature of 1600 to 1650° F., allow to cool in the carbon, reheat to 1350° F. and quench in oil.

The above may, of course, be varied at the discretion of the designer, the object being to obtain a thick casing of a hardness which will indicate from 60 to 70 on the scleroscope.

After hardening, the worm may be finished to required size by grinding which will, if properly performed in a suitable machine, provide a worm accurate upon all threads and with a perfect and lasting working surface.

With regard to the method of manufacture of gears, the casting of the wheel should be rough turned and roughly gashed in a milling machine, after which it is strongly recommended that it be set on one side to season. Being necessarily of considerable mass, the surface tension set up during cooling, on being released by machining will cause some distortion, and seasoning for a period of some weeks will allow the metal to assume a permanent form which it may be relied upon to maintain. The wheel is then turned to exact size and the teeth cut by means of hobbing. It is safe to say that few makers have, until recently, papreciated the necessity for employing extra rigid machinery for this purpose without which the highest class of work is impossible. By the older method of hobbing; a parallel hob was fed *radially* into the wheel, but in more modern methods a taper hob is fed at fixed centers tangentially to the wheel it

Digitized by Google

is cutting; the reason for this is obvious—by such a method alone can the centers be preserved at the required distance and interchangeability of similar gears be assured. It is not possible to obtain the same finish on the worm wheel as in the case of the worm, but some makers have been particularly successful in this respect, finishing the worm wheel with a special kind of hob which leaves an extremely accurate surface which immediately beds to the worm.

In the case of the worm, it is an advantage to rough turn it and rough cut the thread, and then anneal it, to remove internal strains and subsequent distortion, and while in some steels it is not necessary, it is a practice which may be recommended. The cutting of the worm may be performed in a lathe with a single point tool accurately ground to the required form, and for experimental work, saving the expense of cutters, this has its uses; the better method, however, is of course, to mill the thread in a thread milling machine, and special machines are generally used for repetition work. In the case of the hollow or Hindley worm, as used by Mr. Lanchester and others who have followed his example, a special hobbing machine is used for cutting the worm, to which reference will be made again later. Such a worm cannot be ground, and, after hardening, must be cleaned up on its working surfaces by hand. At the time of writing, the author is not aware of any parallel worms having been hobbed, but it seems likely that there may be developments in this direction in the future. Whatever method is adopted, however, the greatest possible accuracy must be insisted upon in the case of both the worm and the wheel, the high efficiency of modern worm gears being almost entirely due to extreme care in this respect.

Digitized by Google

CHAPTER III

DEFINITIONS AND SYMBOLS

A worm gear may be defined as a spur wheel which is rotated by an endless rack, the teeth of which are successively pressed against the teeth of the wheel. By making the rack teeth in the form of a spiral and rotating it upon its axis (sloping the wheel teeth to a corresponding angle), the effect of an infinitely long rack is obtained.

Such a rack is called a parallel worm. By revolving the worm wheel, the teeth of the rack may be caused to move along, that is to say, the worm will itself commence to rotate, the relative motions being thus convertible. The worm is then said to be "reversible," the amount of reversibility depending upon certain fixed principles which will be later discussed.

In order to obtain a greater area of surface contact between the wheel and the rack, the latter may be curved to partially embrace the wheel, the form of the worm then partaking of that of an hour glass. This form is usually known as the Hindley worm, from its inventor, and has been brought to a high state of perfection for use in automobiles by Mr. Lanchester. As the central portion of a Hindley worm exactly corresponds in its action with that of a parallel worm, the same calculations are applicable to either, with the exception of such formulæ as refer to the number of teeth in engagement at one time and consequently the length of the worm; these differences will be treated in their proper place.

We will now define clearly the following expressions to which frequent allusion will have to be made.

Gear Ratio.—As in any other system of gearing, the ratio of the speeds of revolution which one member will make when meshing with the other is called the gear ratio; thus, with a 3 to

Digitized by Google

1 ratio, it is to be understood that the worm will make exactly three revolutions to one revolution of the worm wheel. Unlike spur or bevel gears, however, the ratio is not primarily dependent on the number of threads of the worm, but involves the question of lead.

Lead.—This may be defined as the distance traveled along the axis by one thread in one revolution; it is measured in inches. How this determines the gear ratio may be made clear by the following example. If the worm wheel be 30 in. in circumference and the worm has a lead of 6 in., the gear ratio will be $\frac{30}{6}=5$ to 1. This may be further defined as the dimensional ratio, obtained by dividing the circumference of the wheel by the lead, so that we may say as a starting-point that

$$\frac{\text{wheel circumference}}{\text{worm lead}}=\text{gear ratio} \qquad (1)$$

By increasing the diameter of the wheel the number of teeth is increased and the gear ratio is reduced, while the converse of this is, of course, true, but by increasing the diameter of the worm the rubbing velocity is increased.

By increasing the lead angle, the gear ratio is reduced; the circumferential pitch being first determined and the number of wheel teeth, it follows that a single-threaded worm will give a reduction of 1 to n where n = the number of wheel teeth. A double-threaded worm will have a reduction of 2 to n and so on, but this relationship is not primarily due to the number of threads in the worm but to the lead of the thread which may be extended to include at each revolution one, two, or more teeth. Thus, in a worm having five threads, each thread will make a complete engagement with only every fifth tooth in the wheel, and the other four threads will pick up the intervening teeth respectively.

Pitch Line of Wheel.—Properly speaking a worm wheel has no pitch line at all, that is to say, in the sense of the two rolling circles of spur or bevel gears; it is, however, a convenient expression for a circle corresponding to the mean effective diameter of the wheel and must be so understood.

Digitized by Google

Pitch Line of Worm.—This also has only an hypothetical existence, but may be defined as the circle described about the axis of the worm which touches, at right angles, the pitch circle of the wheel. All subsequent references to "Pitch" whether applied to the worm or wheel must be understood to be measured upon these circles.

Circular Pitch of Wheel.—The distance in inches, or fractions of an inch, between the centers of the wheel teeth measured along the pitch line.

Axial Pitch of Worm.—The distance in inches, or fractions of an inch, between the centers of adjacent worm threads, measured along the pitch line, parallel to the axis of the worm.

Note.—In a worm having more than one thread, this is not the same as the *lead* of the worm. In fact, the lead is the product of the number of threads or starts multiplied by the axial pitch. *The axial pitch of the worm is always equal to the circular pitch of the wheel.*

Normal Pitch of Worm and Wheel.—This is the distance between the centers of two adjacent threads or teeth measured normally or at right angles to their faces along the pitch line. Owing to the inclination of the threads or teeth, this distance is always less than the circular or the axial pitch.

Circumferential Pitch of Worm.—The distance along the pitch line between two adjacent worm threads, measured circumferentially round the worm.

Lead Angle.—The angle formed by the thread of the worm with a line drawn at right angles to the axis of the worm. If the spiral formed by the threads were unwrapped from the worm, it would form an inclined plane having an inclination equal to the lead angle.

Addendum.—The height of wheel tooth or worm thread outside pitch line.

Dedendum.—The depth of wheel tooth or worm thread inside pitch line.

Length of Worm.—The length of the cylinder bounded by the pitch line of the worm. If two radii be drawn from the center to the circumference of the pitch line of the wheel, so that each touches the extremity of this cylinder, they will make an angle

Digitized by Google

which is subtended by the cylinder of the worm pitch line, and the length of this cylinder is the chord of this angle.

Note.—The length of the worm has nothing to do with the the *lead* of the worm.

Subtended Angle of Worm.—If two radii be drawn from the axis to the circumference of the pitch circle of the worm, they will form an angle which is filled by the teeth of the worm wheel. This is the subtended angle of the worm, and is the only manner in which the effective width of the worm wheel can be measured. The determination of this angle has a very important bearing upon the performance of the gear.

Included Angle of Thread.—In a V-threaded worm, the angle made by the inclination of the faces of the V is the included angle.

Pressure Angle.—Half the included angle.

Note.—Both the included angle and the pressure angle may be measured normally or in the direction of the axis; unless otherwise specified, however, the axial angles are always to be understood to be implied.

The following system of symbols will be employed throughout this work.

G =Gear ratio.
D =Pitch line diameter of worm wheel in inches.
d =pitch line diameter of worm in inches.
L =Lead of worm in inches.
l =Length of thread per revolution in inches.
N =Number of teeth in worm wheel.
n =Number of teeth in worm.
R =Pitch line radius of worm wheel in inches.
r =Pitch line radius of worm in inches.
R' =Radius of road wheel in inches.
R'' =Extreme radius of worm wheel on plane of worm axis.
v =Rubbing velocity in feet per second.
T =Torque in pounds at pitch line of worm.
p =Tangential pressure at pitch line in pounds.
p' =Normal tooth pressure.
P =Circular pitch of worm wheel and axial pitch of worm.

Digitized by Google

P' = Normal pitch of worm threads and wheel teeth.
P'' = Circumferential pitch of worm threads.
f = Force separating worm and wheel.
w = Weight at rear axle in pounds on the ground.
x = Safe load on tooth of worm wheel, in pounds.
g = Length of worm in inches.
n' = Number of teeth in contact.
α = Lead angle.
θ = Included angle of worm thread (axial).
Ψ = Normal included angle of thread.
σ = Stress permissible in wheel teeth in pounds per square inch.
γ = Gliding angle.
φ = Angle of friction ($\tan \varphi = \mu$).
μ = Coefficient of friction.
η = Mechanical efficiency.
β = Angle of worm subtended by wheel.
ω = Pressure angle $= \frac{\theta}{2}$.
λ = Length of tooth.
τ = Thickness of worm thread at pitch line $= \frac{P}{2}$.
κ = Dedendum.
o = Addendum.
ρ = Revolutions of worm per minute.
δ = Angle of worm wheel subtended by worm.

Digitized by Google

CHAPTER IV

PRELIMINARY PROPORTIONS

Certain data are required before the design can be attempted. It is usually necessary to know the following:

(a) The gear ratio.

(b) The maximum torque of the motor.

(c) The lowest gear ratio in the transmission.

Note.—The torque delivered to the worm will be the maximum torque of the motor multiplied by the lowest gear ratio (generally the reverse gear) less the drop in mechanical efficiency due to the gears and bearings.

(d) The maximum speed of the motor and especially the speed at which the maximum torque is given off. In an internal combustion motor the speed of maximum torque is always less than the speed of maximum power.

(e) The total weight on the ground at the rear axle.

(f) The diameter of the road wheels.

The first thing to settle is the circular pitch, and while a great deal of latitude is permissible in this, some limitations must be set to it. It will be shown that the strength of the wheel teeth varies directly with the circular pitch; the smallest pitch even in the lightest cars which can be employed is 13/16 in., since less than this gives very little margin for wear or for hidden defects in the bronze of the worm wheel, but it is clearly impossible to increase the circular pitch in direct proportion to the power to be transmitted. The pitch diameter of the worm naturally affects the torque loads on the teeth, and it will be necessary to increase the worm diameter in some proportion to the power, so that it seems that some increase of the circular pitch with the diameter of the worm is a natural sequence. Very coarse pitches are in use notably in the gears adopted as standard in the vehicles of the London General Omnibus

Digitized by Google

Company which are in the neighborhood of 1 7/8 in. but there is no advantage in going above 1 1/4 in. The author has employed 1 1/8 in. in gears transmitting over 90 H.P. through a worm with a pitch line diameter of no less than 4 3/4 in. This in heavy pleasure cars has given perfectly satisfactory results.

The disadvantage of a coarse pitch is this, when at work, the surfaces of the threads and the teeth are separated by a film of oil, the coarser the pitch, the fewer the number of teeth in contact, consequently the tangential pressure between the worm and the wheel must be carried on fewer films of oil, that is to say the specific tooth pressure will be greater and this may rise to a point where the oil is squeezed out and lubrication becomes ineffective; a fine pitch is therefore always better than a coarse one, other things being equal.

There is another aspect to this, the worm must always be rigid beyond the possibility of springing between its journals, with a very coarse pitch so much stock may be removed from the body of metal as to seriously reduce its transverse strength, moreover some slight angular torsion must theoretically occur in the worm itself, and if the cross-section of the threads is considerably greater than that of the central spindle, there is a tendency for the threads to *unwrap* and tear away from the body of the structure; a similar result being very familiar to automobile engineers in the case of heavily stressed splined shafts, which, if the splines be very coarse and rigid in comparison with the rest of the shaft, will tear asunder like the quarters of an orange.

All these considerations therefore point to the desirability of employing a comparatively fine pitch, and in order to ensure stiffness in the spindle and to leave sufficient metal in this, a pitch diameter less than 2 in. is seldom required.

Based upon examples from actual practice, the following pitches as shown in Table 1, will be found satisfactory for different horse-powers:

These are shown diagrammatically in Fig. 1, and while it may be expedient to depart slightly from these relationships to suit special features of axle design, they should be as closely as possible adhered to.

Digitized by Google

TABLE I

H.P.	Circ. pitch	Pitch dia.
15	$1\frac{3}{16}$ in.	$2\frac{1}{2}$ in.
25	$\frac{7}{8}$ in.	$2\frac{3}{4}$ in.
50	1 in.	$3\frac{1}{2}$ in.
75	$1\frac{1}{8}$ in.	$4\frac{1}{4}$ in.
100	$1\frac{1}{4}$ in.	5 in.

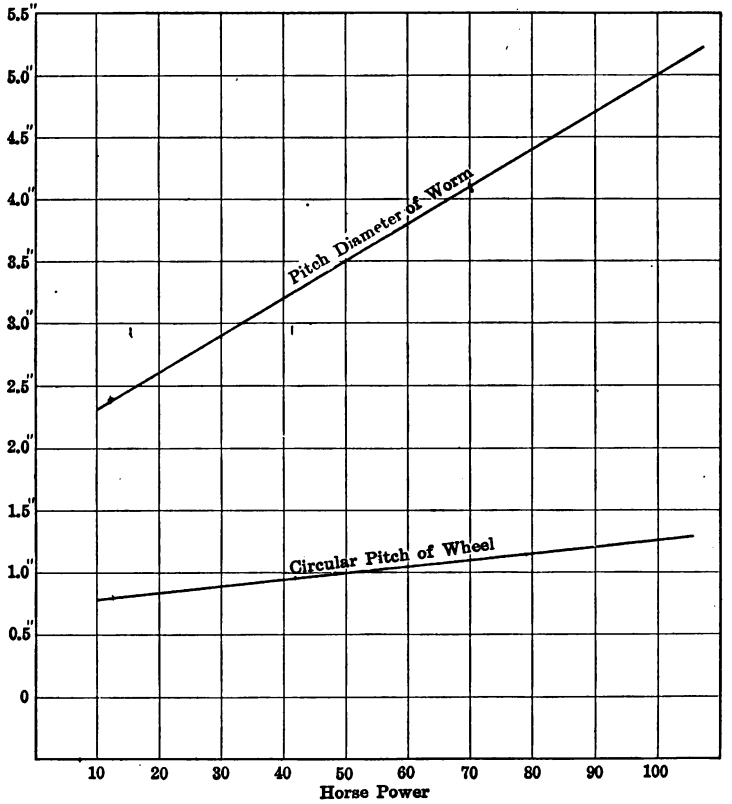

FIG. 1.

Having selected from this table the suitable pitch and worm diameter for a given horse-power, the next thing to determine is the number of wheel teeth and worm threads to give the

Digitized by Google

required ratio. Seeing that a comparatively small pitch has been selected for all wheels, it is evident that a relatively greater number of worm threads is possible.

DETERMINATION OF WORM WHEEL DIAMETER

This will naturally be preferred as small as possible but it must not be reduced at the expense of excessive tangential pressure, and the number of teeth should not be less than 24 or more than 40. The writer has found that almost any conditions can be satisfied with between 30 and 40 teeth, bearing in mind that a very heavy vehicle requires a larger wheel than a light one, but the heaviest commercial vehicle need not have more than 40, and questions of road clearances under the axle will to a great extent determine the diameter which must always remain a matter of judgment on the part of the designer.

The following proportions of teeth are recommended:

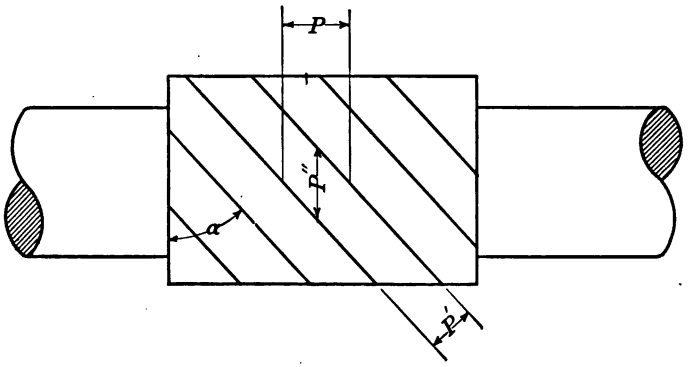

FIG. 2.

Addendum,	.3183 *P*
Dedendum,	.3683 *P*

It has been stated that the pitch of the worm can be measured in three ways (Fig. 2):

Axially	$= P$
Normally	$= P'$
Circumferentially	$= P''$.

and these are inter-related as follows:

Digitized by Google

$$\left.\begin{aligned} P' &= P \cos \alpha \\ P'' &= P' \operatorname{cosec} \alpha \\ \text{Therefore,} \quad P'' &= P \cos \alpha \operatorname{cosec} \alpha \\ P'' &= P \cot \alpha \end{aligned}\right\} \quad (2)$$

It follows from this that the number of threads on a worm has the following relation to its pitch line diameter.

$$\pi d = n P \cot \alpha \quad (3)$$

$$\therefore n = \frac{\pi d}{P \cot \alpha} \quad (4)$$

and to find the number of threads, it is first necessary to know the value of the lead angle α which again depends upon the lead L, and this in its turn upon the gear ratio required.

The gear ratio G has the following value

$$G = \frac{\pi D}{L} \quad (5)$$

hence

$$L = \frac{\pi D}{G} \quad (6)$$

and the lead angle α is such that

$$\tan \alpha = \frac{L}{\pi d} \quad (7)$$

Substituting from equation (6)

$$\tan \alpha = \frac{\frac{\pi D}{G}}{\pi d}$$

$$\tan \alpha = \frac{\pi D}{\pi d G}$$

$$\tan \alpha = \frac{D}{dG} \quad (8)$$

from which α is at once found, and from this the value of n (equation 4).

DETERMINATION OF LENGTH OF WORM AND NUMBER OF TEETH IN CONTACT

The worm and worm wheel may be regarded as two cylinders which cut one another, their axes being at right angles.

Digitized by Google

In Fig. 3, which is a section through the axis of the worm, the line *dc* represents the limiting surface of the worm; *o* is the addendum of the teeth.

R'', the radius of the limiting circle of the worm wheel, is equal to $R+o$.

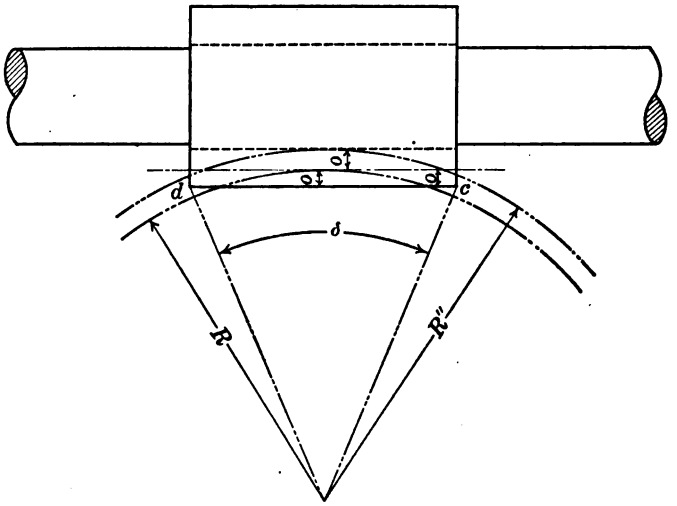

FIG. 3.

The total height of the wheel teeth cutting the cylinder of the worm is $o+o$, and this is also the versin of the angle $\frac{\delta}{2}$.

Therefore, $$\frac{2\times o}{R''} = \text{versin } \frac{\delta}{2}$$

Again, $$dc = 2 \sin \frac{\delta}{2}$$

$$\therefore \text{the length of } dc = 2\,R'' \sin \frac{\delta}{2} = g \qquad (9)$$

Since the teeth of the wheel are hobbed, it follows that every space between the worm threads has a wheel tooth corresponding to it and some portion of this is in contact with a thread of the worm.

The number of threads is $\frac{g}{P}$ (10)

Digitized by Google

and this is the number of teeth in contact at all times. Let this $=n'$.

Then, $$n'=\frac{g}{P} \tag{11}$$

Substituting for g,

$$n'=\frac{2R''\sin\frac{\delta}{2}}{P} \tag{12}$$

Up to this point we have considered the method of determining the following:

Pitch of the wheel teeth,
Diameter of worm,
Diameter of worm wheel,
Lead angle,
Number of worm threads,
Length of worm.

The centers of the worm and wheel are evidently expressed by the following

$$c=\frac{D+d}{2} \tag{13}$$

and having thus settled the leading dimensions, we are in a position to investigate the correct form of thread, and the required strength of the various parts to withstand the stresses to which they will be subjected.

It is convenient at this point to introduce a number of formulæ which will frequently have to be referred to in the rest of this investigation.

Lead of worm $$L=Pn \tag{14}$$

Length of thread per revolution $=l=\pi d\sec\alpha$ (15)

hence, rubbing velocity of worm

$$v=\frac{\pi d\sec\alpha\times\text{r.p.m.}}{12\times 60}\ \text{ft. per second.}$$

$$v=\frac{\pi d\sec\alpha\times\text{r.p.m.}}{720} \tag{16}$$

Lead angle α may be found from

$$\tan\alpha=\frac{Pn}{\pi d} \tag{17}$$

Digitized by Google

Whence it follows that the angle of lead is not affected by the number of teeth in the wheel.

The rubbing velocity v is given by some writers as being the circumferential speed of the worm; this is incorrect and would only be true of a worm having its lead angle $=o$; it is of course dependent upon the length of thread (per revolution of worm) measured around the spiral and equation (15) gives the correct value. The manner in which the rubbing velocity is affected by the diameter of the worm may be illustrated in the following manner.

It is evident that a given lead may be obtained by a large diameter worm with a small lead angle, or a small worm with a very quick angle, but that similar results will give very different conditions of working is apparent from the following examples. Take the case of three worms having each a linear pitch of 5 in., but with pitch line diameters of (*a*) 3 in., (*b*) 5 in., and (*c*) 7 in. respectively.

It follows from equation (17) that the lead angles of such worms will be as follows:

(a) $\tan \alpha = \frac{5}{3\pi} = \frac{5}{9.42} = .531$ whence $\alpha = 28°$

(b) $\tan \alpha = \frac{5}{5\pi} = \frac{5}{15.70} = .318$ whence $\alpha = 17° 39'$

(c) $\tan \alpha = \frac{5}{7\pi} = \frac{5}{21.99} = .2274$ whence $\alpha = 12° 49'$

and the rubbing velocities from equation (16) will be at 1000 revolutions per minute.

(a) $\frac{1.132 \times 9.42 \times 1000}{720} = 14.8$ ft. per second.

(b) $\frac{1.049 \times 15.7 \times 1000}{720} = 22.9$ ft. per second.

(c) $\frac{1.025 \times 21.99 \times 1000}{720} = 31.3$ ft. per second.

The immediate effect of this is at once apparent, since to revolve the worm wheel for one second of time the surfaces of

Digitized by Google

the three worms referred to will have to travel through these distances in order each to revolve the worm wheel through the same amount and, as the lost work of the worm per revolution is represented by $l \times \mu \times p'$ where l is length of thread per revolution, μ is coefficient of friction, and p' the tooth pressure, it follows that the losses will be directly proportional to the length of thread, that is, the rubbing speed.

Digitized by Google

CHAPTER V

PRESSURE ANGLE AND FORM OF THREAD

It has already been remarked that much misconception formerly existed as to the possibility of any worm gear being reversible, that is to say, that an automobile so fitted would be unable to "coast." In this connection, the form of thread is of the utmost importance and by its manipulation, we can provide within practical limits perfect reversibility with any lead angle of ordinary dimensions.

Let it always be remembered that a section through the worm on a plane including its axis, will represent it as a rack, and the worm wheel as a pinion rolling upon it. It is not necessary to state that if the sides of the teeth of the rack be straight, the teeth of the pinion will be of an involute form; moreover, if the wheel were of very large diameter, the sides of the teeth of the rack could be square or nearly so. The size of the wheel, however, in an automobile is necessarily very limited, and consequently if the rack teeth or worm threads were made square, a great amount of undercutting would ensue in the generation of the wheel teeth, and to avoid this, the threads of the worm must be cut away in the form of a V, and this brings us to the question of the pressure angle.

In their "Practical Treatise on Gearing," Messrs. Brown & Sharpe recommend a pressure angle of 14 1/2 degrees, that is to say, the threads of the teeth will have an included angle of 29 degrees; it is, however, pointed out in the same work, that interference of the rack teeth will begin in wheels of 31 teeth if this angle be adopted. Something larger than this will therefore have to be selected. There is, however, another aspect to this, and in it is involved the question of reversibility.

It must be remembered that the surface of the worm thread is constantly slipping over the faces of the wheel teeth, and the

Digitized by Google

direction in which this slipping takes place is along a plane mutually tangent to the face of the thread, and the face of the wheel teeth. It is evident that if this gliding angle be 45 degrees, it will be immaterial whether the worm drives the wheel or the wheel the worm; with a square thread, however, such a gliding angle is only possible if the proportions of the worm are such that they are satisfied by the equation

$$\pi d = L \tag{18}$$

The gear ratio and the dimensions of the worm and wheel may, and generally will, make this impossible.

In Fig. 4, let *a b c* be a triangle where *a c* equals the lead and *b c* is equal to the circumference of the pitch line of the worm. Then the angle *a b c* equals the lead angle of the worm. The

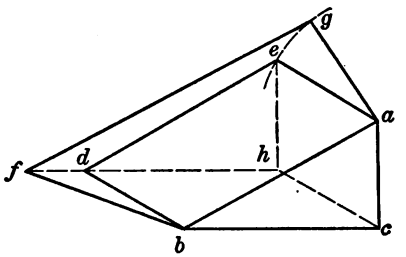

FIG. 4.

working surface of the thread is shown in perspective by the plane *a e d b* and, in a square-threaded worm, the angle *a b c* is the gliding angle of the rubbing surfaces. As drawn, however, this angle is much less than 45 degrees and such a gear cannot be reversible, except to a slight degree. Now suppose the plane *a e d b* partially rotated about the line *a b* as an axis until it assumes the position *a g f b*, the angle which the plane makes with the horizontal plane *d b c h* may become 45 degrees without any increment of the angle *a b c*, or in other words converting the square into a V thread, the gliding angle has been raised to 45 degrees without increasing the lead angle. If then a gliding angle of 45 degrees were the one object to be attained, this would be satisfied by the equation $a + \frac{\theta}{2} = 45$ degrees where *a*

Digitized by Google

equals lead angle and θ equals the angle included between the faces of the V thread as shown in Fig. 5, and any gear designed

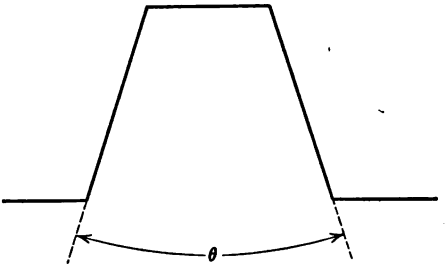

FIG. 5.

upon these principles will be perfectly reversible, provided the angle of the pitch is kept within reasonable limits.

TABLE II.—SHOWING REQUIRED ANGLE θ TO GIVE A GLIDING ANGLE OF 45 DEGREES

Lead angle, α	Included angle, θ
25	40
26	38
27	36
28	34
29	32
30	30
31	28
32	26
33	24
34	22
35	20
36	18
37	16
38	14
39	12
40	10
41	8
42	6
43	4
44	2
45	0

Digitized by Google

Perfect reversibility will be secured if the above proportions are followed; it has, however, already been shown that a thread which is square or nearly so will cause destructive undercutting in the wheel teeth. How then in the case of a lead angle of 45 degrees is reversibility to be obtained?

It happens that with gears machined by modern processes, the coefficient of friction is very low; in recent experiments made upon the worm gears for operating the lock gates at the Panama Canal the coefficient of friction was so low that gears which were actually required to be irreversible were found to be the reverse in actual practice, and this fact may be taken advantage of by the designer of automobile gears inasmuch as the angles given in the above table may be departed from within very wide limits without in any way impairing the reversibility.

With a narrow tooth, such as is given with a 14 1/2 degree pressure angle, the difficulty of milling the worm is much increased, in cases where, as is usual, the lead angle is above 28 degrees. By making a flatter tooth, that is one with a more open V, this difficulty to a great extent disappears, and the grinding of the worm teeth is also a far simpler operation.

The author's practice is to adopt for the sake of uniformity a universal angle of 60 degrees which greatly simplifies designing and which gives entirely satisfactory results in both manufacture and operation, this angle being, of course, measured in a plane parallel to the axis of the worm.

Throughout what follows then, a value of 60 degrees will be assumed for θ.

The relation between the axial included angle and the included angle measured on a section cut normally to the worm thread is such that

$$\tan \frac{\theta}{2} = \frac{\tan \frac{\Psi}{2}}{\cos \alpha} \tag{19}$$

Hence

$$\tan \frac{\Psi}{2} = \tan \frac{\theta}{2} \cos \alpha \tag{20}$$

Digitized by Google

and the milling cutters with which the threads of the worm are milled must be ground to this angle, Ψ.

Thirty degrees will consequently be the axial pressure angle recommended for general practice.

It will be objected that the above practice is contradictory to the theory of reversibility—why use a gliding angle so much higher than the theoretical value? The answer is that experience shows that reversibility is not affected nor is the efficiency, and a great advantage accrues from the absence of any undercutting of the worm-wheel teeth, and the buttress form which is given them greatly increases their resistance to shearing and diminishes interference.

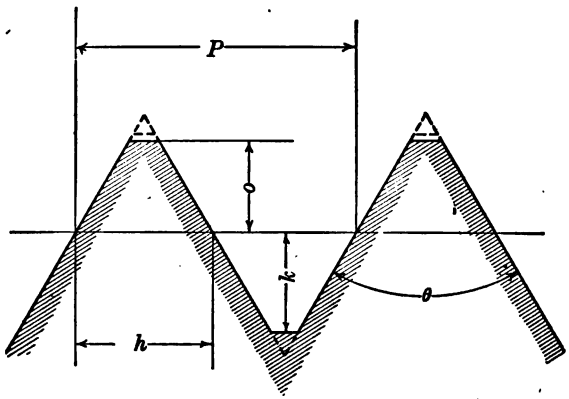

Axial Section Through Worm Teeth
FIG. 6.

Fig. 6 illustrates a section cut through the worm in the direction of the axis and fixes the proportions of the thread, all of which are based upon the pitch P, which is of course the same as the circular pitch of the wheel. The points of the teeth are shown with sharp corners, but in practice, when finishing the hardened worm, the extreme corners should be very slightly removed by grinding. In making the hob for cutting the worm wheel, the addendum o must be lengthened as shown by the dotted lines until it is equal to κ, by which means a working clearance will be provided at the bottom of the teeth. This will give to the wheel teeth a dedendum equal to that of the

Digitized by Google

worm κ, and the height of the teeth in contact will be twice the addendum o or .6366 P.

It must always be borne in mind that the pressure between the worm threads and the wheel teeth is transmitted along a line normal to a plane drawn mutually tangent to the teeth of the wheel and the threads of the worm at the momentary point of contact. When the worm is rotating, a number of these lines of pressure envelop the worm in a segment of a cone, whose apex is located in a prolongation of the worm axis, and whose base is the sector of the circle of the worm pitch line contained within the angle subtended by the worm wheel. Hence the thrust of the worm is not all taken up on the thrust bearing but is partly carried on the journal bearings in which the worm is mounted. This will be further considered when dealing with the stresses in bearings.

The next point of consideration is the width of the wheel; this affects two things, first the length of the wheel teeth, and secondly the number of teeth in contact with the worm.

On the length of the teeth, to a great extent, depends the strength of the worm wheel considered as a spur wheel and this is determined as follows:

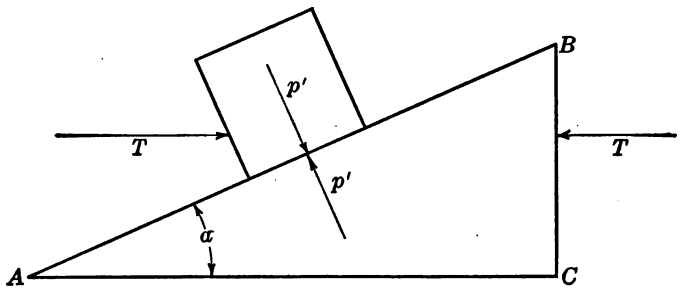

FIG. 7.

The tooth pressures will, on reflection, be seen to be due to one of two causes.

(a) The torque of the motor applied at the worm pitch line.

(b) The negative tractive effort due to the momentum of the car when brakes are applied to the transmission.

Dealing with (a), in Fig. 7, the developed thread surface is

Digitized by Google

shown by the line AB, the developed pitch line by the line AC; T is the torque available at the pitch line. Then the weight W, which can be lifted by T, will be expressed by the equation:

$$W = \frac{T}{\tan(\alpha+\phi)} \tag{21}$$

Where ϕ is the angle of friction, the reaction between the surfaces at p' will then be represented by

$$p' = \frac{W}{\cos(\alpha+\phi)} \tag{22}$$

This reaction is, of course, the tooth pressure, and is expressed by the equation:

$$p' = \frac{T}{\frac{\tan(\alpha+\phi)}{\cos(\alpha+\phi)}} \tag{23}$$

which may be written

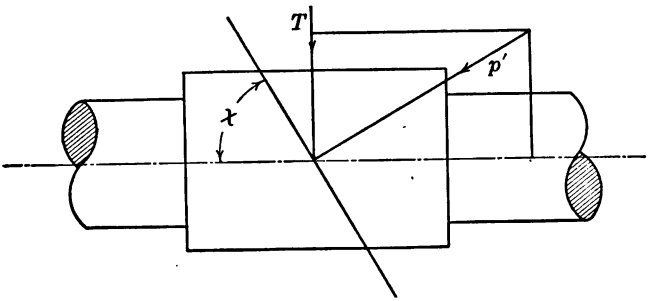

FIG. 8.

$$p' = \frac{T}{[\tan(\alpha+\phi)][\cos(\alpha+\phi)]} \tag{24}$$

or
$$p' = \frac{T}{\sin(\alpha+\phi)} \tag{25}$$

Messrs. Brown & Sharpe arrive at the same result in a different manner. Ignoring friction, they resolve the acting forces as shown in Fig. 8.

when
$$p' = \frac{T}{\cos\chi} \tag{26}$$

hence
$$p' = \frac{T}{\sin 90-\chi} \tag{27}$$

Digitized by Google

Neither of these equations, however, takes into account the pressure angle; for the more accurate expression see Equation 43, Chapter VII.

Many forms of worm teeth are possible. Hitherto we have considered only straight-sided teeth but the worm thread may be given any form, for example, cycloidal or involute, but the difficulty of manufacturing such worms as these is almost prohibitive and a straight tooth is the only alternative. A curved tooth worm was recently made and tested by the Brown & Sharpe Manufacturing Company in the experiments which they carried out early in 1912, but beyond being an extremely interesting mechanical production and working quite satisfactorily, the worm was of no special value. Much more important, however, is the hollow or Hindley worm, in which the worm being of hour-glass shape is made to embrace an arc of the worm wheel. That perfectly satisfactorily working gears may be designed on this system is proved by the uniform success obtained by such makers as Lanchester and Daimler. There is, however, a good deal of misconception as to the relative merits of straight and curved worms which it is the object of the following remarks to correct. As the author is in the position of having employed both types, he will, it is to be hoped, be exonerated from any prejudice in the matter.

In the first place, when hobbing the wheel for an ordinary straight worm, the blank is entirely grooved out from a solid mass of metal by the hob in such a way that the hob completely generates the teeth of the wheel and as has been pointed out, *every* part of the face of each tooth is forced to touch against some part of the worm thread. The entire surface of the tooth is, therefore, subject to wear. The hob is, in this case, at its finishing end, an exact duplicate in its profile of the worm itself.

If a hob be made of the curved form and a blank be cut with it, the tooth of the resulting wheel will be perfectly straight and the wheel will be flat on the points of the teeth. Fig. 9 is a photograph of such a wheel cut by Brown & Sharpe for the experiments already referred to. It is seen that the worm is really the wheel, and the wheel, the ordinary straight worm, the relative diameters of the two having been reversed from the

Digitized by Google

usual. Such a gear works well as shown by the experimental results. So far as the author's information goes, however, it is never used in automobiles. It is, nevertheless, the true Hindley worm, and, as a section through it shows, it makes contact at all points across the teeth, the entire tooth being subject to wear exactly as is the case with the straight gear, which in effect it is.

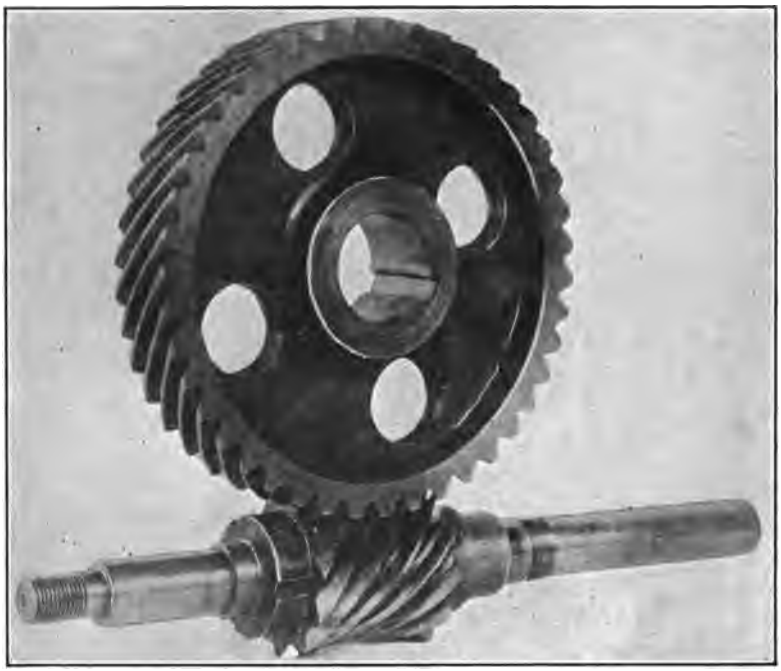

FIG. 9.

The gear first employed by Lanchester is not, however, a truly developed gear at all as both the worm and the wheel are hollow and such a wheel *can only be hobbed with a very short hob* and driven with an equally short worm. It has, however, this peculiarity that a section on the center of the worm shows a perfect contact along all the worm teeth at once. In other words, the worm applied to the wheel will shut out daylight entirely along its center line and if say four teeth of the wheel are subtended by the worm, all will be in contact at once. In

Digitized by Google

Fig. 10, which represents any worm gear, let the lines *A*, *B*, *C*, *D* and *E* represent planes of section. Then in a Lanchester worm, a section of plane *C* will show every tooth in contact over its whole depth. Similar sections on *B* and *D* show decreasing contact, and sections on *A* and *E* show no contact at all. If the same section be taken on a straight worm gear, it will be found that on each plane there is one tooth in contact with the worm at some point across the tooth. Consequently with a

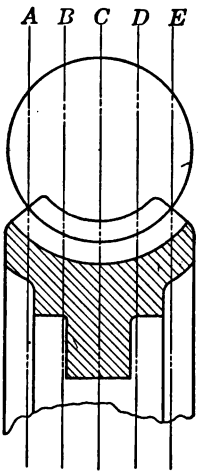

FIG. 10.

very little care on the part of the designer, the number of teeth in contact can be made exactly the same in the case of the hollow and the straight worm. This point must be insisted upon. Here, however, there comes a difference. The straight worm perpetually re-generates the surface of the wheel tooth maintaining the correct involute outline to the end of its life, and in the other type, as the pressure is always along the central plane, it follows that the greatest wear takes place along this line and the tendency is to finally reduce the worm wheel to the form of Fig. 11. The word "tendency" is used advisedly because the rate of wear on any perfectly made worm gear is almost inappreciable so that the difference between the two is rather an academic one. One advantage is on the side of the Lanchester worm; since the sides of the wheel never touch the

Digitized by Google

worm, they can be cut away altogether and the wheel considerably reduced in width and weight thereby. Its disadvantage is that the worm cannot by any mechanical device be ground on any of its finished working surfaces, so less accurate finish must follow.

FIG. 11.

Another argument presents itself against the use of this type: it is that it is harder to assemble and adjust, since the worm must be truly located on the wheel in three planes, while the straight one requires adjustment in only two. This necessity for exact location in the axial direction of the worm demands

Digitized by Google

much more care of the thrust bearings and further when the worm becomes warm under use expansion must take place endways and the contact be impaired. The fact remains, however, that this form of gear is entirely satisfactory if perfectly made and in point of efficiency, the experiments of the Brown & Sharpe Manufacturing Company[1] referred to in Chapter X show that the efficiency of the hollow worm approaches that of the straight so nearly that the difference may be said to be negligible and it is extremely doubtful if a sufficient number of examples were taken whether this difference would as an average exist at all.

[1] The Brown & Sharpe experiments referred to have recently (Nov., 1912) been confirmed by a very careful test on a Daimler worm driven axle, carried out by the National Physical Laboratory, London, of which a report has been published by the Daimler Motor Car Co. of Coventry, England.

Digitized by Google

CHAPTER VI

STRENGTH OF WORM-WHEEL TEETH

The behavior of a worm wheel, considered as a structure, is exactly analogous to that of a spur wheel; that is to say, the stresses upon the teeth have precisely similar effects in their tendency to shear off the teeth, and therefore, apart from the special nature of worm gear and the effects of rubbing, which have to be provided against by special proportioning of the teeth, it becomes necessary to design them from this point of view in the first instance, afterward modifying the form of the teeth if necessary to suit the other considerations of the case.

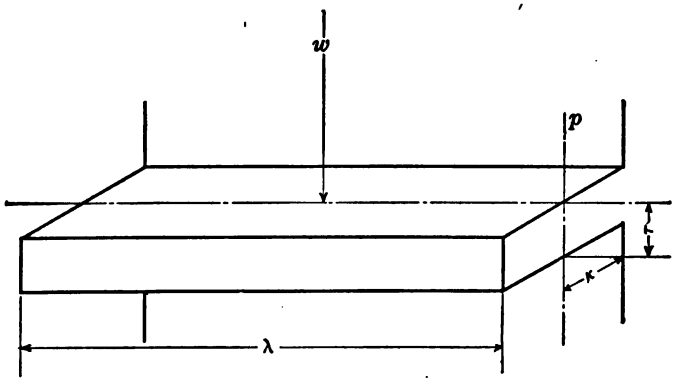

FIG. 12.

The stresses in the worm wheel caused by the tangential pressure between it and the worm are limited, not by the horse-power of the motor but by the maximum tractive resistance between the car wheels and the road, thus

$$p = \frac{w\mu R'}{R} \tag{28}$$

The tooth of the worm wheel is a cantilever on which the load w is applied at a point near the center of the tooth on the pitch line pl (Fig. 12).

Digitized by Google

Let l = length of thread of worm per revolution through 360 degrees.

β = angle of worm circumference subtended by worm wheel.

λ = actual length of tooth.

τ = thickness of tooth on pitch line $= \frac{P}{2}$

Then
$$\lambda = \frac{l\beta}{360} \tag{29}$$

The length of the cantilever κ is the dedendum of the tooth which may be taken as $.3683P$.

Let σ = permissible stress in metal, say 7000 lb. per square inch.

Then the safe load applied to the cantilever =

$$W = \frac{Z\sigma}{\kappa} \text{ (where } Z = \text{modulus of the section)} \tag{30}$$

and
$$Z = \frac{\tau^2\lambda}{6} \tag{31}$$

If x = safe load on tooth in pounds

$$x = \frac{\frac{1}{6} \times \frac{l\beta}{360} \times \tau^2 \times \sigma}{\cdot 3683P} \tag{32}$$

$$\therefore x = \frac{\frac{1}{6} \times \frac{l\beta}{360} \times \left(\frac{P}{2}\right)^2 \times \sigma}{\cdot 3683P} \tag{33}$$

This simplifies into

$$x = 2.2\, l\beta P \tag{34}$$

This formula supplies a very useful check on the design of the wheel and should always be applied before finally settling the dimensions of the gear. Except in very unusual cases, a wheel properly proportioned as regards the subtended angle β and the number of teeth in contact, will be strong enough in any case as a spur wheel; the exceptions exist in very heavily loaded commercial vehicles where one of the brakes is applied to some part of the transmission system, whereby, should the wheels be locked by this brake, and the car be caused to skid, the tractive

Digitized by Google

resistance will rise to a high figure tending to shear off or at least to bend the wheel teeth, while at the same time, considered purely as a worm gear, the conditions are not by any means destructive for the high tooth pressure occurs with zero rubbing velocity and consequently there are no heating effects.

Digitized by Google

CHAPTER VII

STRESSES IN WORM GEARING

In a subsequent chapter, the stresses in the gears as affected by the width of the wheel and the number of teeth in contact will be investigated, but before considering these, it will be advisable to analyze all the stresses in the gears, as we can then determine the specific tooth pressure between the working surfaces and this value will be needed in the final proportioning of the wheel.

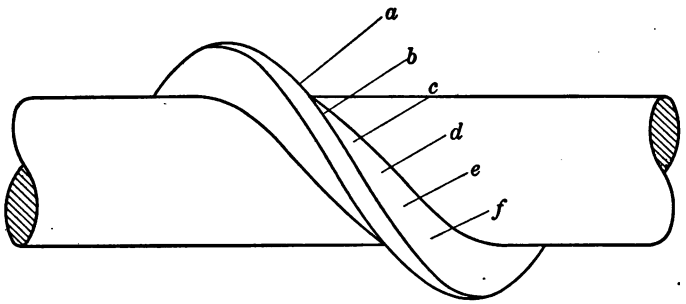

FIG. 13.

In the example already considered, the contact between the worm and the wheel is made at five different points simultaneously, but owing to the fact that there are five threads to the worm, any diagrammatic representation of the same is much complicated; let us, therefore, consider the same worm divested of four of its threads as in Fig. 13; then some part of the remaining thread is brought in contact with every part of the surface of the wheel tooth against which it presses, and the successive lines of pressure commence at *a* and end at *f*. The surface of the worm thread forms a continuous spiral around the axis, and, therefore, each one of these lines of pressure makes successively the same angle with the axis of the worm. In Fig. 13, these

Digitized by Google

lines of pressure are shown as a skeleton diagram, and it is seen that they form a portion of the surface of a conical spiral encircling the worm. Taking Fig. 13, the portion of this surface will be seen to be approximately a segment of a cone, and seeing that several teeth operate at one time, the central tooth in contact is touching the worm at a point which lies in a line joining the centers of the worm and worm wheel drawn at right angles to the former; the other teeth approaching to and receding

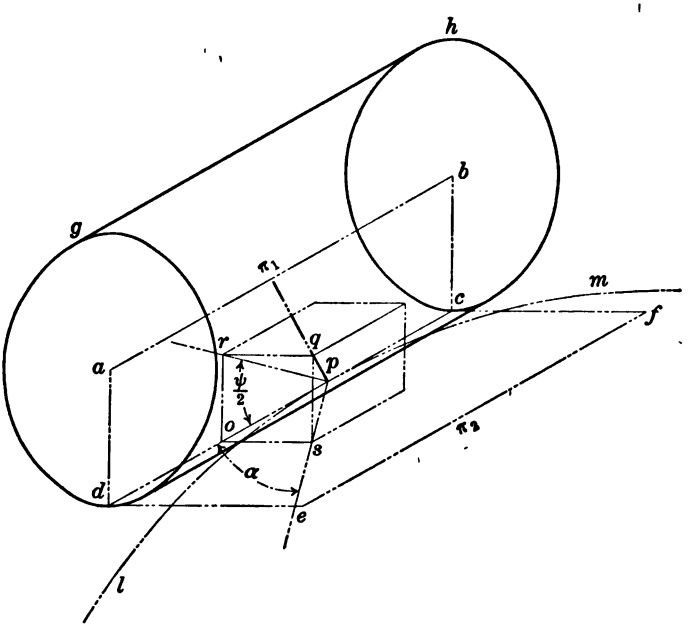

FIG. 14.

from this line, touch the worm threads respectively to the right and left of this point, viewed from the end of the worm axis. The lines of pressure, therefore, for every point of contact range themselves in such directions as will conform more or less to the surface of a cone, and the resultant line of pressure coincides with that of the tooth which is momentarily in the central position. Owing to the fact that this curved surface is not a true cone but a conical spiral, it will be appreciated that this is not mathematically accurate but sufficiently so for our

Digitized by Google

purpose. Taking this central line of pressure the calculation of the direction of this force becomes exceedingly simple.

Let *ab*, Fig. 14, be the axis of the worm and *a b c d* (π_1) a perpendicular plane cutting this axis; also *c d e f* (π_2) a horizontal plane normal to π_1 and touching both pitch lines; *c d g h* is the cylinder of the pitch circle of the worm, and *l p m* that of the wheel; *p* is the point of contact between the worm thread and the central tooth in engagement; *p s* is the line of pressure due to the angularity of the lead angle α; *p r* is the normal pressure angle elevated $\frac{\Psi}{2}$ degrees above the horizontal plane. Draw *r o* and *s o*, each perpendicular to the line *d c;* raise the perpendiculars *r q* and *s q*, and through the point *q* where they cut, draw the line *p q; p q* is then the resultant pressure line; *p q* does not lie in the plane of the axis *a b* and therefore *p q* and *a b* will never meet although not parallel to each other; it is evident that the force tending to separate the worm and the wheel passes along the line *p q* and is the reaction of the tooth pressure at this point.

r o s q is, by construction, a parallelogram; hence, *p s q* is a right angle and if *p s* be drawn to such a scale that it represents the magnitude of the tooth pressure,

$$p' = \frac{T}{\sin(\alpha+\varphi)} \qquad \text{(25) Chapter V}$$

The length of the resultant *p q* can be calculated as follows

Taking first, plane π_2 (Fig. 14)

$$p\,o\,s = 90 \text{ degrees}$$

$$\therefore\ p\,o = ps \cos\alpha$$

and

$$s\,o = ps \sin\alpha$$

In plane π_1,

$$or = po \tan\frac{\Psi}{2} \qquad (35)$$

$$\text{and } pr = po \sec\frac{\Psi}{2} \qquad (36)$$

$$\therefore\ or = ps \cos\alpha \tan\frac{\Psi}{2} \qquad (37)$$

$$\text{and } pr = ps \cos\alpha \sec\frac{\Psi}{2} \qquad (38)$$

Digitized by Google

The triangle pqs can then be resolved as follows:

$$qs = or \text{ and } psq = 90 \text{ degrees}$$

$$\therefore (pq)^2 = (or)^2 + (ps)^2 \tag{39}$$

$$\text{Substituting } (pq)^2 = \left(ps \cos \alpha \tan \frac{\Psi}{2}\right)^2 + (ps)^2 \tag{40}$$

$$\therefore pq = \sqrt{\left(ps \cos \alpha \tan \frac{\Psi}{2}\right)^2 + (ps)^2} \tag{41}$$

and since ps is by construction $= p' = \dfrac{T}{\sin(\alpha + \varphi)}$

we at once obtain the value of pq the resultant pressure, and since pq is greater than ps, the value of pq must be taken wherever p' is in question[1] in terms of the torque T.

$$pq^2 = \left(\frac{T \cos \alpha}{\sin \alpha} \times \tan \frac{\Psi}{2}\right)^2 + \left(\frac{T}{\sin \alpha}\right)^2 \tag{42}$$

$$pq = \sqrt{\left(T \cot \alpha \tan \frac{\Psi}{2}\right)^2 + \left(\frac{T}{\sin \alpha}\right)^2} \tag{43}$$

and pq must be taken as the correct value of p' wherever the latter is required to express the actual tooth pressure normal to the working surface.

Lastly, $qs = ps \tan z$

$$\tan z = \frac{qs}{ps} \tag{44}$$

and substituting

$$\tan z = \frac{p' \cos \alpha \tan \frac{\Psi}{2}}{p'} \tag{45}$$

$$\tan z = \cos \alpha \tan \frac{\Psi}{2} \tag{46}$$

Whence z is easily found from Equation 20, Chapter V.

This settles the direction and magnitude of the resultant line of pressure due to the torque of the motor.

The worm and worm wheel are carried in ball bearings in which the stresses can be found in the following manner. The end thrust of the worm in the direction of its axis is po (Fig. 16) and is equal to $p' \cos \alpha$.

[1] *See Equations* 25, 26 and 27.

Digitized by Google

but $$p' = \frac{T}{\sin(\alpha+\varphi)}$$

Therefore, $$po = \frac{T\cos\alpha}{\sin(\alpha+\varphi)} \qquad (47)$$

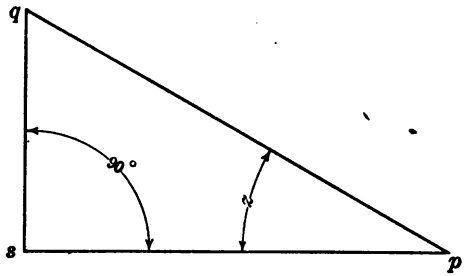

FIG. 15.

It has already been shown that φ is negligibly small.

Therefore, $$po = \frac{T\cos\alpha}{\sin\alpha} = T\cot\alpha \qquad (48)$$

po is the tangential pressure on the worm $= p$

$$\therefore\ p = T\cot\alpha \qquad (49)$$

Let $f = pq$ = the separating force, $qs = ro$ = the force acting radially on the journal bearings of the worm.

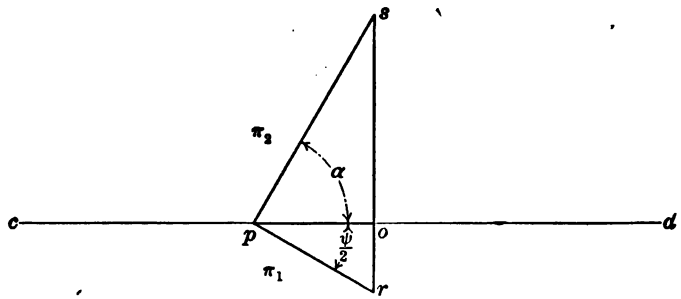

FIG. 16.

$$or = p'\cos\alpha\tan\frac{\psi}{2} \qquad (50)$$

and substituting for p'

$$or = \frac{T}{\sin(\alpha+\varphi)}\cos\alpha\tan\frac{\psi}{2}\ . \qquad (51)$$

Digitized by Google

neglecting φ

$$or = \frac{T \cos \alpha \tan \frac{\Psi}{2}}{\sin \alpha} \tag{52}$$

$$\therefore or = T \cot \alpha \tan \frac{\Psi}{2} \tag{53}$$

Notwithstanding that this vertical force is the actual pressure tending to separate the worm and wheel in the direction of a line drawn between and perpendicular to each of their axes, it is not, as Mr. Kalb has shown, the ultimate stress on the journal bearings for the following reason. In Fig. 17, let A be

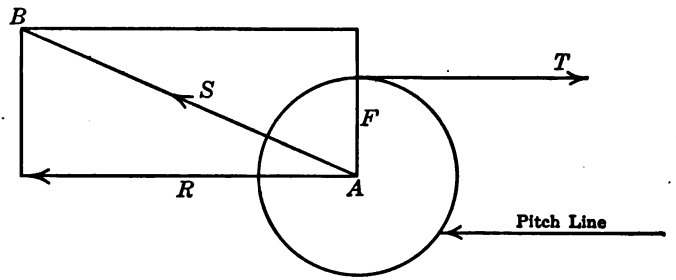

FIG. 17.

the axis of the worm, T is the moment of torque at the pitch line; it is, of course, balanced by the reaction R which is the horizontal stress upon the journal bearings of the worm $= T$. We have just seen, however, that there is a vertical pressure on these same bearings $= T \cot \alpha \tan \frac{\Psi}{2} = F$ in the figure. There is, therefore, a total stress on the journal bearings which is equal to the resultant of F and R, viz., S; from the construction the figure AB is a rectangle, hence

$$S^2 = F^2 + R^2 \tag{54}$$

substituting for F^2

$$S^2 = \left(T \cot \alpha \tan \frac{\Psi}{2}\right)^2 + T^2 \tag{55}$$

$$S = \sqrt{\left(T \cot \alpha \tan \frac{\Psi}{2}\right)^2 + T^2} \tag{56}$$

Digitized by Google

S being in this case the resultant separating force. It is evident that this force acting on the bearings of the worm has its exact counterpart in the bearings of the worm wheel; in Fig. 18, the two side components of the forces acting on the wheel are shown, and they are seen to consist of the torque T and the vertical pressure F as before; the resultant force S produces a diagonal stress on the worm wheel and differential case, but as the vertical and horizontal components are located in the plane

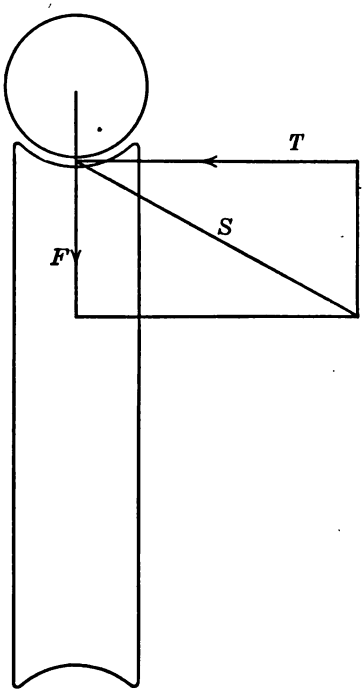

FIG. 18.

of the axis of motion in the case of the wheel, there is no resultant force acting on the bearings. It follows from this, therefore, that theoretically the journal bearings of the wheel are more lightly stressed than those of the worm, but in practice it is not possible to make them any smaller, even if it were desirable, since the arms of the differential case are invariably larger in diameter than the worm spindle and necessitate a larger bearing to support them.

Digitized by Google

With regard to the side thrust of the worm wheel, referring to Fig. 14, we see that the component of side thrust of the force pq is in the direction so, we know this to be $= ps \sin \alpha, = p' \sin \alpha$

but $$p' = \frac{T}{\sin (\alpha + \varphi)}$$

therefore $$so = \frac{T \sin \alpha}{\sin (\alpha + \varphi)}$$

neglecting φ as before

$$so = T$$

It has already been pointed out that the stresses in the gears due to braking, especially in the case of a heavy commercial vehicle, may be very much greater than those due to the motor torque. Just before the wheels come to rest by skidding with the application of the transmission brake, the end thrust on the worm must be considered to be that due to the tractive resistance at the road wheels, multiplied by the radius of the road wheels, and divided by the radius of the worm wheel. As however, at the instant of coming to rest, that is when the tractive effort is so low as to be negligible, the motion of the worm is very slow, the ball bearings of the worm thrust, being scarcely moving, will carry a very great load, and do not therefore need to be very much greater than is necessary for satisfactory working with more moderate loads at high speeds. The conditions under which the vehicle will be required to work are, however, so various that the risks which may be taken in this respect must be a matter of the designer's judgment and experience, and no empirical rules can be laid down for them.

It need hardly be pointed out that the torque T is the torque delivered at the pitch line of the worm when the lowest transmission gear is in use, and though the value of $p' v$ does not become any greater (but rather less, owing to the work absorbed in tooth and bearing friction in the transmission gears) p' is greater than the torque of the motor itself, by the amount of the gear ratio in operation.

We are now in a position to tabulate the complete stresses in worm gearing for any angle of worm gear, and their magnitude per pound of torque moment for all usual angles of lead is

Digitized by Google

given in the following table, where the axial pressure angle is assumed to be 30 degrees. In this table the value of the fric-

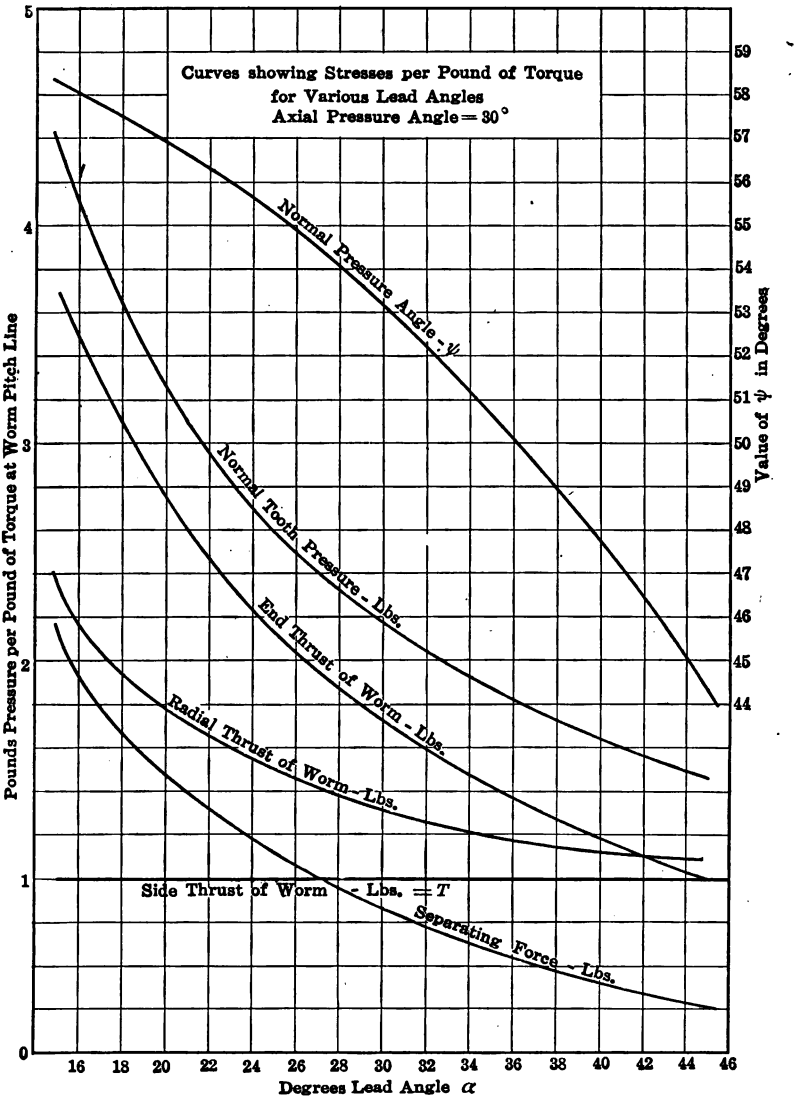

FIG. 19.

tion angle has been omitted as being too small to have any practical value.

Digitized by Google

Fig. 19 has been plotted from this table, and from it all the intermediate values of different angles of lead may be found. This diagram will be found of great value in designing or analyzing the stresses in any worm gear.

TABLE III.—STRESSES IN WORM GEARING

Lead angle α	Ψ	Worm end thrust	Resultant normal tooth pressure	Separating force	Resultant radial thrust	Side thrust
15°	58° 18′	3.732	4.39	2.16	2.38	1
20°	56° 50′	2.747	3.27	1.485	1.79	1
25°	55° 14′	2.144	2.61	1.122	1.52	1
30°	53° 8′	1.732	2.18	0.866	1.322	1
35°	50° 38′	1.428	1.88	0.676	1.202	1
40°	47° 44′	1.191	1.64	0.527	1.130	1
45°	44° 26′	1.000	1.47	0.405	1.080	1

Lead angle $= \alpha$

Ψ is obtained from $\tan \frac{\Psi}{2} = \tan \frac{\theta}{2} \cos \alpha$ (20) Chapter V

Worm end thrust $= T \cot \alpha$ (49)

Normal tooth pressure $= \sqrt{\left(T \cot \alpha \tan \frac{\Psi}{2}\right)^2 + \left(\frac{T}{\sin \alpha}\right)^2}$ (43)

Separating force $= T \cot \alpha \tan \frac{\Psi}{2}$ (53)

Radial thrust $= \sqrt{\left(T \cot \alpha \tan \frac{\Psi}{2}\right)^2 + T^2}$ (56)

See Appendix A.

Digitized by Google

CHAPTER VIII

THE WIDTH OF THE WORM WHEEL

When an automobile is being driven by the motor, the torque of the latter is applied to the road wheels up to the point where they will commence to slip; this slip will prevent the increase of horse-power transmitted beyond a certain fixed amount (see equation 28, Chapter VI). In the case of a very heavy vehicle, the tractive effort is much greater than the motor torque and the strength of the wheel teeth x (equation 34, Chapter VI) must be such that it will be sufficient to withstand the tooth pressure due to stresses of braking calculated from equation 28.

There are always more than one tooth in contact at one time. Consequently,

$$x=\frac{p'}{n'} \text{ and we can write} \qquad (59)$$

$$2.2\ l\ \beta P=\frac{p'}{n'}$$

$$\text{and } \beta=\frac{p'}{2.2\ l\ Pn'} \qquad (60)$$

$$\beta\ n'=\frac{p'}{2.2\ l\ P} \qquad (61)$$

It is evident from this that β and n' vary inversely, and β cannot be diminished without correspondingly increasing n', and since n' from the design of the gear is unalterable, it follows that if β be reduced, the equation can no longer be satisfied.

The alteration of β, therefore, has a very important effect on the behavior of the gears, since the specific pressure would by its decrease be augmented. β is thus given a new and important significance, for in addition to determining the strength of each individual tooth, it also governs the number of teeth in engagement at one time.

Digitized by Google

Mr. John Younger has supplied the following means of obtaining the value of β.

The length of the worm g is a multiple n' of the circular pitch P, and it contains in its length a certain number of threads n' of which it is most important to take the fullest possible advantage. In order to ensure this, it is necessary to determine the width of worm surface, or in other words, the angle β, which will provide a wheel tooth to each thread of the worm. This can be determined graphically in the following manner:

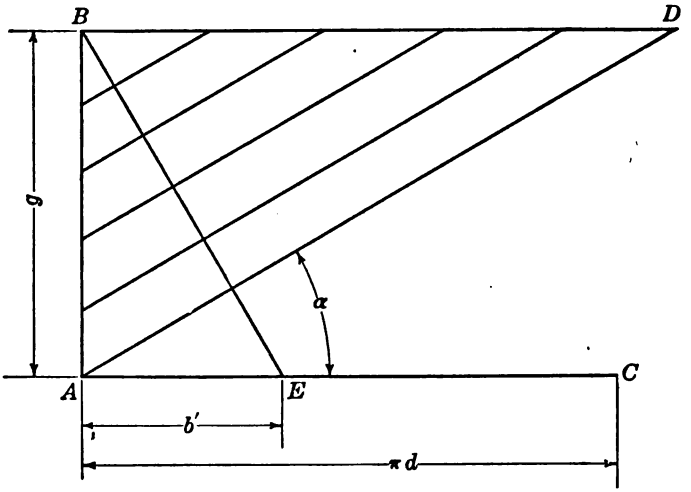

FIG. 20.

Let $A\,B$ in Fig. 20 be the length of the worm $= g$; AC is the outside circumference of the worm. From the point A, AD is drawn so that the angle $DAC = \alpha$. From B, the line BE is drawn perpendicular to AD. The distance $A\,E$ is the length of the arc of the worm which must be subtended by the worm wheel in order that some part of every thread of the worm in the length AB will touch one of the wheel teeth; from this diagram, the following equation is obtained from which the value of β is at once found for any example.

$$\beta = \frac{360\, g \tan \alpha}{\pi(d + 2xo)} \qquad (62)$$

Digitized by Google

when g is the total length of the worm $= n'P$

$$2 \times o = 2 \times .3183\ P = .6366\ P \tag{63}$$

Hence the equation becomes

$$\beta = \frac{360\ g \tan \alpha}{\pi(d + .6366 P)} \tag{64}$$

In Fig. 21 the cross-section of the worm wheel is shown. It will be observed that the "width" of the wheel can be measured at three points, viz., at the pitch line, at the root of the teeth, and at the outside, this last being somewhat deceptive as it has no natural connection with the width of the working face.

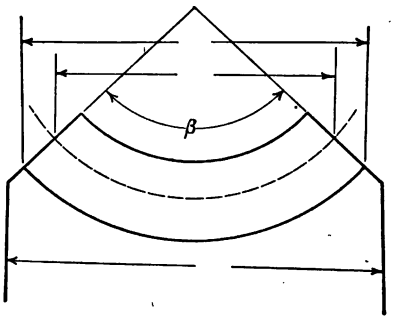

FIG. 21.

Each dimension may be expressed as the chord of the angle β measured at different radii. The radius of the pitch line being $\frac{d}{2}$ that of the root of the teeth $\frac{d}{2} + \kappa$.

Sufficient thickness of metal must be left in the rim to properly support the teeth of the wheel as in the case of a spur gear.

The subject of worm contact has been very fully investigated by Mr. Robert A. Bruce (Proc. Inst. Mech. E., Jan., 1906), and the reader is referred to this for a very complete geometrical analysis of the subject; the present writer, however, takes exception to some of his reasoning which is somewhat confusing by his method of illustrating the contact by the use of vertical parallel planes cut through the worm teeth. Such planes do not follow the lines of pressure between the contact surfaces and are consequently distorted sections through what is admittedly a very difficult section to correctly illustrate upon paper.

Digitized by Google

He points out, however, that every part of the outline of the wheel tooth is compelled at some time to touch some part of the worm. This is, of course, self-evident when it is remembered that the wheel is cut with a hob whose outline is the exact replica of the worm.

Mr. Bruce sums up his conclusions as follows:

"The area of physical contact varies as the pitch diameter of the worm multiplied by the square root of the diameter of the wheel; or, if the effects of varying the angle subtended by the pitch line of the worm wheel at the center of the worm be considered, it may be said that the effective area of contact varies as the continued product of the diameter of the worm, the tangent of half the angle subtended by the worm wheel, and the square root of the diameter of the worm wheel. At any instant the end pressure is shared between several teeth, and it is therefore justifiable to expect a greater power of sustaining loads as the number of teeth in action is greater. The variation in the number of teeth in gear is, however, much more apparent than real. Except in the case of abnormally small worm wheels, the length of the contact paths on the worm wheel side of the pitch plane is unaffected by the size of the worm wheel On the other side, the contact lines most affected are those which are flattest, or which most nearly coincide with the pitch line. The actual variation in the number of teeth in gear at any one time is found on careful investigation to be small for widely differing sizes of worm wheel. So that in comparison with other more important matters it may be neglected.

"By keeping the ratio of the height to the thickness of the teeth as large as practicable, the greatest possible number of teeth are enabled to operate simultaneously, but at the same time, in order to avoid interference, *the teeth should be pitched as finely as is compatible with strength and allowance for wear.* It should be noticed that in respect of the height of the teeth the dictum given above is in direct opposition to the best practice with spur gearing, where entirely different conditions are in force.

"The effect of the angle of the worm thread remains for consideration. As the ratio of pitch to the diameter of worm be-

Digitized by Google

comes greater, the thrust of the worm is borne on a surface of greater inclination and the actual pressure on the teeth is increased in the same ratio as the secant of the angular pitch. At the same time the width of the contact line across the face of the teeth is increased in the same ratio, so that the actual pressure per unit of width remains the same. *It is not necessary therefore to take any account of the angle of the helix in making estimates of the 'effective contact area'.* Under precisely similar conditions as to temperature, lubrication, nature of the surfaces in contact and rubbing velocities, it might reasonably be anticipated that the end thrust would be proportional to the effective area, and neglecting comparatively unimportant factors the relation may be expressed as follows:

$$p = K\sqrt{Dd \tan\frac{\beta}{2}} \qquad (65)$$

so p = some factor depending on conditions $\times$ effective breadth $\times$ effective width across the face of the worm teeth.

where p = safe end-pressure in pounds.
d = diameter of worm at pitch line.
D = diameter of worm wheel pitch line.
β = angle subtended by the worm wheel at the axis of the worm.
K = a factor depending upon rubbing velocity, nature of the surfaces, temperature and nature of the lubricant, etc.

"Experience has shown that this relationship is far from simple in practice, because of the great difference in the factor K imposed by variable conditions. Broadly speaking, what happens in the case of a worm wheel drive is very much what happens in the case of a loaded journal. The action commences under certain conditions as to speed, temperature and so forth, and as it proceeds heat is generated owing to frictional resistance, the amount depending upon the load, the lubricant and the efficiency of the gear. The temperature of the system rises until the heat generated by friction balances the heat lost by radiation and convection, when a stable set of conditions is

Digitized by Google

established. But while the temperature is rising, the lubricant is losing its viscosity, and, though this tends to diminish the friction and consequently the generation of heat, it nevertheless diminishes the power of sustaining a heavy load. A worm will, therefore, be successful if the viscosity of the lubricant does not diminish to such an extent that its load-sustaining properties are neutralized. If the surfaces be allowed to come into grinding contact, further heating takes place, and the lubricant becomes still less viscous and therefore incapable of bearing a load, and seizing will take place quickly."

Mr. Bruce, in his paper already referred to, gives the following formula for calculating the width of contact area from which he determines the tooth pressure. According to this,

$$b = K\sqrt{\frac{r_1 r_2}{r_1 \pm r_2}} \qquad (66)$$

when r_1 and r_2 are the respective radii of the surfaces in contact. As, however, owing to exigencies of interference when being hobbed, it is practically impossible to determine the radius of the wheel-teeth surfaces, this formula does not seem to have much more than a theoretical value. Moreover, owing to the elasticity of the metals employed, and variations in the quality of the lubricant, no reasonable figure can be assigned to K in the equation. All that we can do, therefore, is to establish from experience an empirical value for the number of teeth in contact in its relation to actual performance, and deduce some rule from this.

The author carried out the following experiment to ascertain the effect of varying β in a specific instance.

An axle was taken fitted with a standard worm gear similar to many hundreds running in heavy commercial vehicles of the author's design and giving eminently satisfactory results. The gear was driven from a 50-H. P. electric motor running at a constant speed, and an hydraulic dynamometer was attached to the other side of the gear, and adjusted to furnish a constant load (Fig. 21 A). The dimensions of the worm gear were as follows:

Digitized by Google

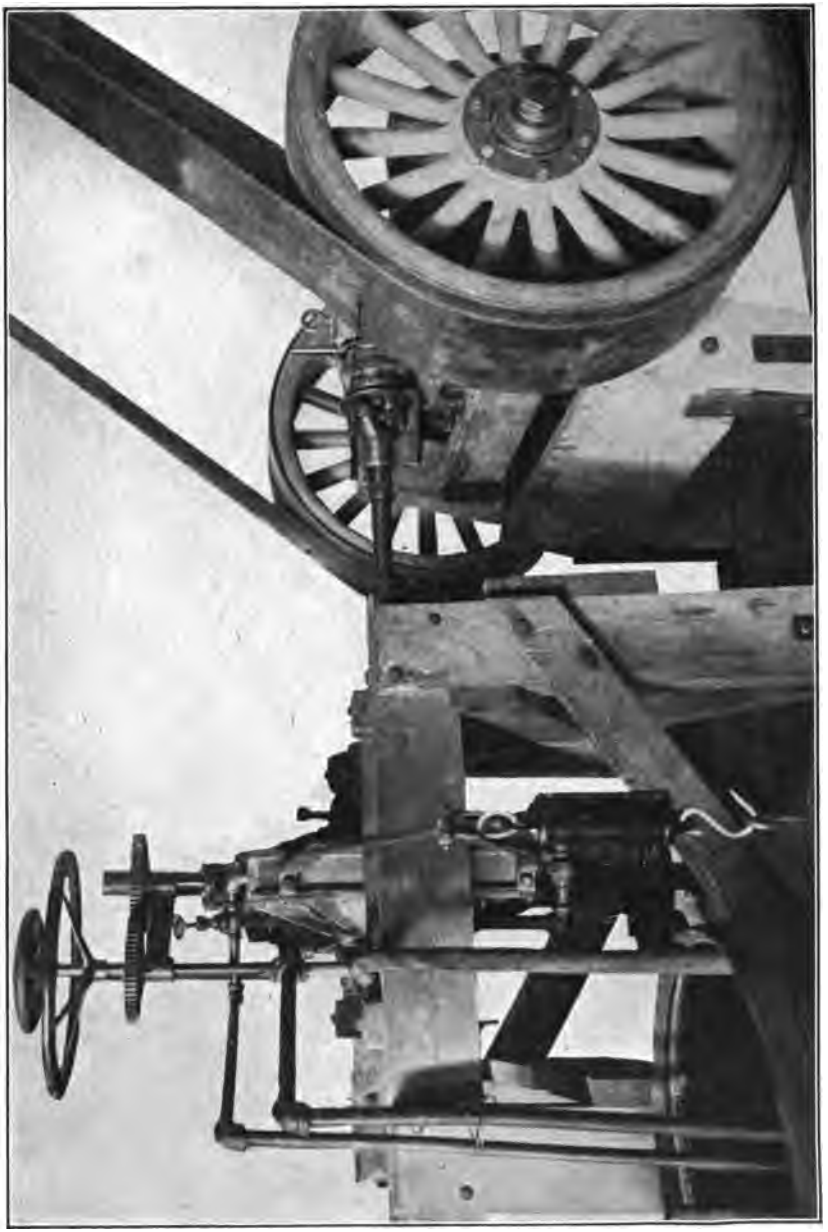

FIG. 21 A.

Digitized by Google

Worm:	Number of threads	5
	Pitch diameter	3.25 in.
	Pitch circumference	10.21 in.
	Length of worm	5 in.
	Lead	5. 9375 in.
	Lead angle	30° 11′
	Thread angle	60°
	Length of thread per rev	11.812 in.
	Rubbing speed	18.5 *f. p. s.*
Worm Wheel:	No. of teeth	39
	Pitch diameter	14.75 in.
	Pitch	1.875 in.
	Subtended angle β	(see table).

The torque at the worm pitch line was kept constant at 1990 lb. giving a normal tooth pressure of 4378 lb. The rubbing

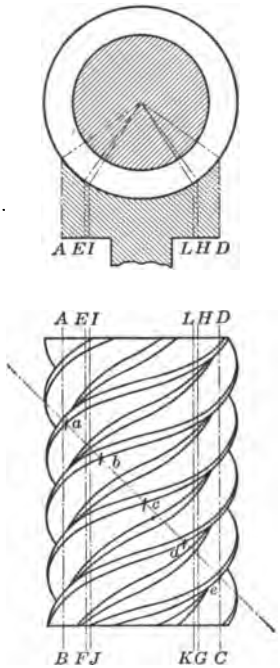

FIG. 22.

speed was also nearly constant at 18.5 ft. per second. Consequently the heat generated in friction (from equation 68, Chapter IX) was 12.6 B.T.U. per minute and (from equation 73, Chapter IX) the area of rear axle surface should be 8.6 sq. ft.

Digitized by Google

The actual surface was approximately 11 sq. ft. Fig. 22 shows a section of the worm wheel of which the original value of β was 107° 45′; under these conditions, the number of teeth in contact was 5 (equation 12, Chapter IV). The wheel was subsequently cut down in width as shown in the figure.

In Fig. 22, the gears are shown diametrically in section and plan, the lines *AB*, *CD*, indicate the original width of the gears with $\beta = 107° 45'$. There are then five points of contact—*a*, *b*, *c*, *d*, and *e*.

β was then reduced to 72° as shown by lines *EF* and *GH*. The points of contact are thus reduced to three—*b*, *c*, and *d*.

β reduced again to 64°, still left three points of contact, but further reduction to 55° 30′ as shown by lines *IJ*, *KL* left only two teeth in contact at *c*.

The following table shows the results obtained:

TABLE IV

	No. 1	No. 2	No. 3	No. 4
Subtended angle β	107° 45′	72°	64°	55° 30′
Revo. of worm	2,000,211	775,008	1,590,000	Failed
Rubbing velocity v. f.p.s.	18.5	18.25	18.34	18.34
Tooth pressure p′	4378	4378	4378	4378
Area at base of tooth	3.286 in.	2.262 in.	2.1 in.	1.82 in.
Width of wheel	3.25 in.	2.3437 in.	2.0937 in.	1.8437 in.
Temperature attained t′	163° F.	412° F.	412° F.	500° F.
Temperature of air t	75°	76°	74°	72°
t′ − t	88°	336°	338°	428°
No. of teeth in contact	5	3	3	2
Pressure per tooth	875	1459	1459	2189
Estimated pressure per square inch.	5840	9730	9730	14,580

The failure of the gears in Experiment No. 4 took place from partial seizure. In the first three experiments, the duration was sufficient to arrive at constant conditions and a maximum temperature rise, but about twenty minutes running under conditions No. 4 showed the temperature rising so rapidly that operations were suspended and the gears examined. It was plainly evident that failure was due to actual metallic contact

Digitized by Google

between the surfaces, and this fact taken in conjunction with the last lines of the table shows an unmistakable connection between specific tooth pressure and temperature. The conditions in No. 1 test being alone normal when the individual tooth pressure was 875 lb.

To determine the area in contact on each point is impossible with any accuracy but in the author's opinion, in the gears in question, this amounted to .15 to .2 sq. in—probably the former. Assuming this figure, we should have in the first experiment 5840 lb. per square inch, and since experiment shows

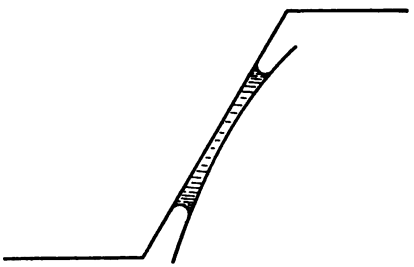

FIG. 23.

that the dry metal will carry this pressure within its elastic limit, there is every reason to believe it was not much exceeded. Plotting the pounds per tooth in the form of a curve (Fig. 24), we can obtain an approximation to the intermediate points, and we find the curve to be distinctly hyperbolic in character as might be expected, having its o origin with an infinite number of teeth and rising to infinity with o teeth.

All that can be said positively about the contact is that undoubtedly the surfaces are separated by a film of oil (Fig. 23), and between the two convex surfaces the existence of this oil cushion can be relied upon provided an individual tooth pressure of say 900 lb. is not exceeded at a velocity of 18.5 ft. per second. Multiplying these values together, we at once obtain the necessary constant,

$$p'v = 16{,}650 \qquad (67)$$

and it may be safely said that 17,000 must never be exceeded for continuous running if overheating is to be avoided.

The fact will not be lost sight of that in all four of the above mentioned experiments, the quantity of heat generated was

Digitized by Google

approximately constant, and of course, the surface of radiation remained the same; the convection and radiation of heat must, therefore, have been at a constant rate also, and the rise in temperature was due to an alteration in the coefficient of fric-

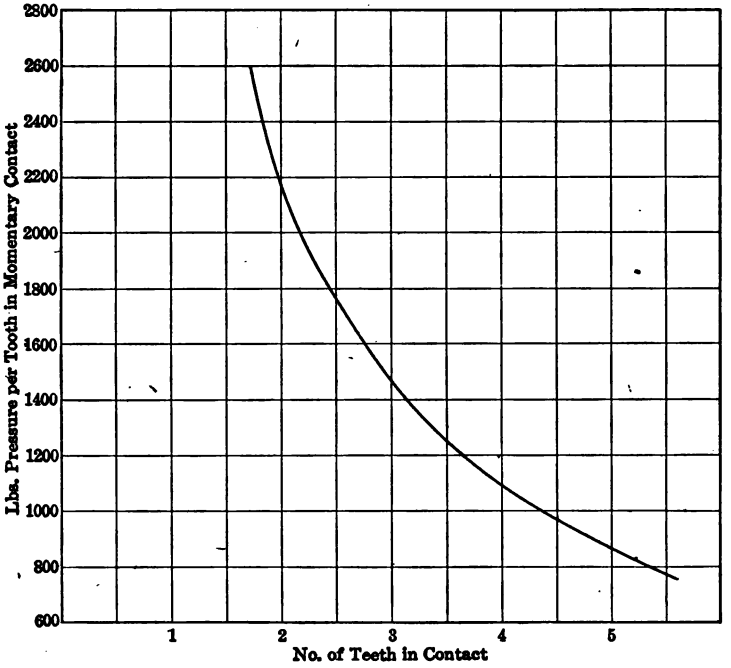

FIG. 24.

tion, caused by the, at first, partial, and subsequent total, breaking down of the oil film with the increased tooth pressure. Too much stress cannot, therefore, be laid upon the importance of securing a proper lubricant. In these trials, the oil used was what is commercially known as "600 *W* cylinder oil," this being a mixture of heavy mineral oil of high viscosity with some animal oil and possessing the following properties:

Beaumé gravity	25.9°	at 60° F.
Specific gravity	.8980	at 60° F.
Viscosity	154.4	at 210° F.

The viscosity reading is with a Tagliabue viscosimeter.

It was found that a sample of this oil could be heated to 700° F. in an open cup without igniting.

Digitized by Google

CHAPTER IX

THE TEMPERATURE COEFFICIENT

In any worm gear, there must always be a definite amount of heat generated since it cannot operate without some friction, which is converted into heat.

Let H be the quantity of heat in B.T.U. per minute.

Then
$$H = \frac{p'\mu v 60}{778} \tag{68}$$

This quantity of heat is added every minute to the complete axle system which will raise its temperature to a definite extent; and if h = mean specific heat of the whole axle system and m its mass in pounds, its capacity for absorbing this heat will be mh. Then if no radiation takes place from the axle, its temperature will increase at the rate of

$$\frac{H}{mh} \text{ degrees F. per minute} \tag{69}$$

It is evident that the heat generated has ultimately to be radiated from the axle at the same rate per minute. Let q = this quantity of heat in B.T.U.

It is desirable that the oil should not be permitted to attain a temperature of over 180° F. because its viscosity and lubricating properties are considerably reduced at higher temperatures, and if we assume the worst conditions and provide for an atmospheric temperature of 100° F., it follows that the difference between the temperature of the worm and the atmosphere will be 80° F.

Let t' and t respectively be the temperatures of the gear and the atmosphere. Then

$$t' - t = 80°$$

Digitized by Google

A formula for radiation is

$$q = (t - t_1) \times a \times c \qquad (70)$$

Where a = radiating area in □ and c is a figure derived from experiment denoting the B.T.U. radiated per minute per square foot per degree F. difference. This may be taken as

.455 at 15 f.p.s. velocity of cooling air.

Whence $q = 36.5a$, B.T.U. per minute (71)

Connecting equations (68) and (71)

$$\frac{p' \mu v 60}{778} = 36.5a$$

or $$a = .0000423\ p'v \qquad (72)$$

if $$p'v = 15{,}000, \text{ then } a = .635 \text{ sq. ft.} \qquad (73)$$

the minimum exposed area of the axle.

This figure is necessarily only approximate because the rate of radiation varies with so many factors. For example, the condition of cleanliness or otherwise of the axle casing and its speed through the air, atmospheric conditions, and so forth. Moreover, heat is conducted away from the gearing through the axles and springs and to some extent through the propeller shaft. It will be found in practice that the surface of radiation determined by the formula is quite easy to obtain, but if from any cause it is too small, overheating will be only a question of how often the vehicle has to run at maximum power on low gear, when conditions of tooth pressure will be highest. Even in this direction, some chances may legitimately be taken, since continuous running on low gear very rarely occurs, and even on long hills there are periods where the maximum horse-power is not exerted, which will consequently tend to a heat balance being maintained.

It must be pointed out that the oil used for lubrication is but a poor conductor of heat so that the difference in temperature between the gears and the atmosphere is generally greater than is rendered apparent by a thermometer placed in the oil, but

Digitized by Google

the gears may be run for short periods at very much higher temperatures than those allowed for.

In formula (68) since μ is a constant quantity, viz., .002, it follows that

$$H = Kp'V \qquad (74)$$

when K is a constant = .000154.

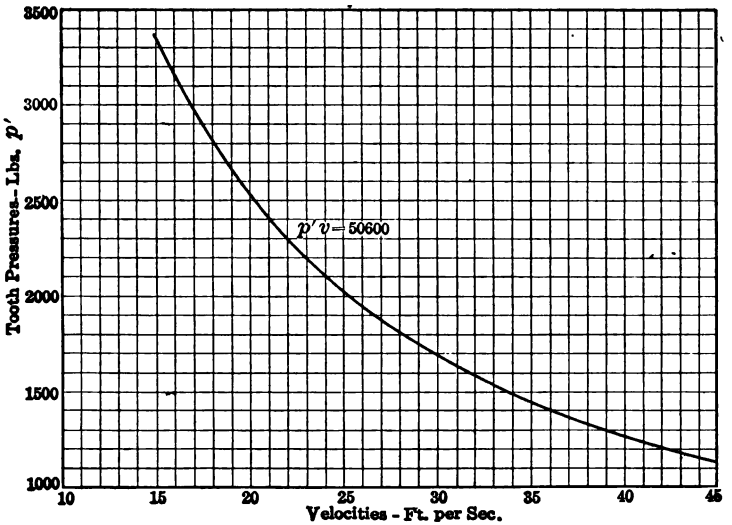

FIG. 25.

and consequently H varies as $p'V$, and if a constant value is demanded for H, it follows that $p'V$ is a constant.

In Fig. 25, an hypothetical case, the rubbing velocities are represented as abscissæ and the tooth pressure in pounds as ordinates, $p'V = 50{,}600$ a constant and the curve is in consequence an hyperbola.

In the Bach & Roser experiments, it was found that at constant temperatures, a very close approximation to this hyperbola was obtained. Thus, the important deduction from this is, that given the maximum pressure and speed of any gear at which a *constant* temperature may be maintained, the other pressures and speeds can always be calculated, lower speeds permitting higher pressures and conversely.

Digitized by Google

It is profitable to investigate the effect on the quantity of heat generated by varying the pressure and the velocity.

$$H = v \frac{p' \mu \, 60}{778}$$

Case 1.—Assume p' constant at 3500 lb. then

$$H = v \frac{3500 \times .002 \times 60}{778} = .54 \; v$$

TABLE V

v f.p.s.	B.T.U. per minute
5	2.70
10	5.4
15	8.1
20	10.8
25	13.5
30	16.2
35	18.9
40	21.6
45	24.3

Here the difference = 2.7 B.T.U. per increment of 5 f.p.s.

Case 2.—Assume v constant at 45 ft. per second

$$H = p' \frac{.002 \times 45 \times 60}{778} = .00694 \; p'$$

TABLE VI

p'	B.T.U. per minute
1500	10.41
1750	12.14
2000	13.88
2250	15.62
2500	17.35
2750	19.09
3000	20.81
3250	22.55
3500	24.30
3750	26.05
4000	27.75

Digitized by Google

Here the difference = 7.4 B.T.U. per increment of 250 lb. Fig. 26 shows these increments of H plotted against pressures and velocities respectively, and the results show that for a com-

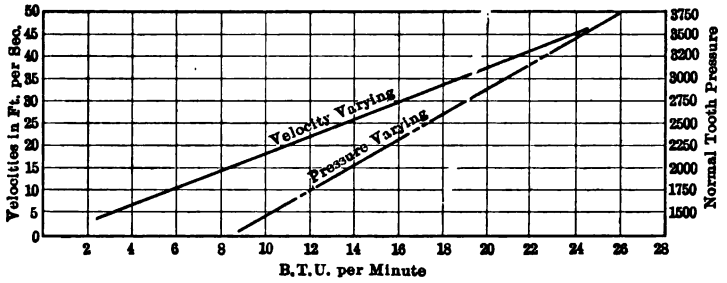

FIG. 26.

paratively small increase in the normal tooth pressure, the heating effect is increased at a greater rate than with relatively larger increments of the velocity.

Digitized by Google

CHAPTER X

EFFICIENCY OF WORM GEARING

The efficiency of worm gearing has been discussed by several writers and it will be dealt with next, because closely bound up with it is the coefficient of friction between the worm and wheel, and the determination of the latter is a necessary preliminary.

The most complete investigation of mechanical friction that the author is familiar with, is that conducted by Beauchamp Tower, and published by him in various numbers of the Proceedings of the Institution of Mechanical Engineers. Taking the materials most nearly corresponding to those employed for worm gears, viz., steel rubbing against bronze in a bath of mineral oil, we find the lowest value he obtained for μ was .0008. No doubt these conditions were ideal, but suppose we take a higher value, .002, as an assumption, and then see how nearly this can be approached and maintained in practice; it will presently be shown that we are fully justified in so doing, seeing that the conditions favorable to a low coefficient are all present in a worm gear. These are

1. Brief period of contact.
2. Intermittent pressure.
3. Certainty of oil films reaching every part of the pressure surface.
4. No metallic contact.

The well-known experiments of Bach & Roser at the Royal Technical High School, Stuttgart, throw some light on the behavior of worm gears, but unfortunately they were carried out upon gears which were by no means as accurately made as is the case in the present day practice; but while their results are of little specific value, they undoubtedly illustrate the laws which govern the whole performance of worm gears.

Digitized by Google

The worm gear upon which the experiments were made appears to have been of the following proportions:

Worm:	Number of threads	3
	Pitch diameter	3 in.
	Lead	3 in.
	Lead angle	17° 40′
Wheel:	Number of teeth	30
	Pitch diameter	9.54 in
	Circumferential pitch	1 in.

The tooth pressures were varied from 190 to 2660 lb., and tests were made at six different speeds as follows:

v = 28.30 f.p.s.
19.34 f.p.s.
9.80 f.p.s.
4.62 f.p.s.
2.56 f.p.s.
0.85 f.p.s.

It will be observed that while the tooth pressures are in some accordance with automobile practice, the velocities are lower than is ordinarily the case.

Fig. 27 shows the tooth pressures and coefficients of friction for different velocities obtained in these experiments. It is at once apparent that for velocities between 2.5 and 20 ft. per second, the coefficient is but little affected by the speed but varies curiously with the pressures on the teeth, attaining in all cases a minimum at or near 1000 lb. tangential pressure. Unfortunately these experiments do not state, or give sufficient data to calculate, the specific tooth pressure per square inch, which would have been very valuable. As has, however, been pointed out by Mr. Robert A. Bruce, the deductions from these experiments are only useful when the exact conditions of the original experiments are reproduced, and he further points out that with superior working surfaces, *e.g.*, hardened and ground worms, and efficient cooling arrangements higher pressures might be realized.

With a view to proving the comparability of worm gears and the journals investigated by Beauchamp Tower, the author carried out the following experiment.

A completely assembled rear axle belonging to a 5-ton com-

Digitized by Google

mercial vehicle of the author's design was taken and mounted upon a stand (Fig. 28),' using one of the road wheels as a drum round which a weighted cord could be wound. A smaller drum was secured to the worm spindle with another weighted cord wound upon this. The relative diameters of the drum on the axle and the drum on the worm spindle were such that their ratio was the same as that of the worm gear reduction, viz., 7.8 to 1. Equal weights being hung upon the cords, equilibrium

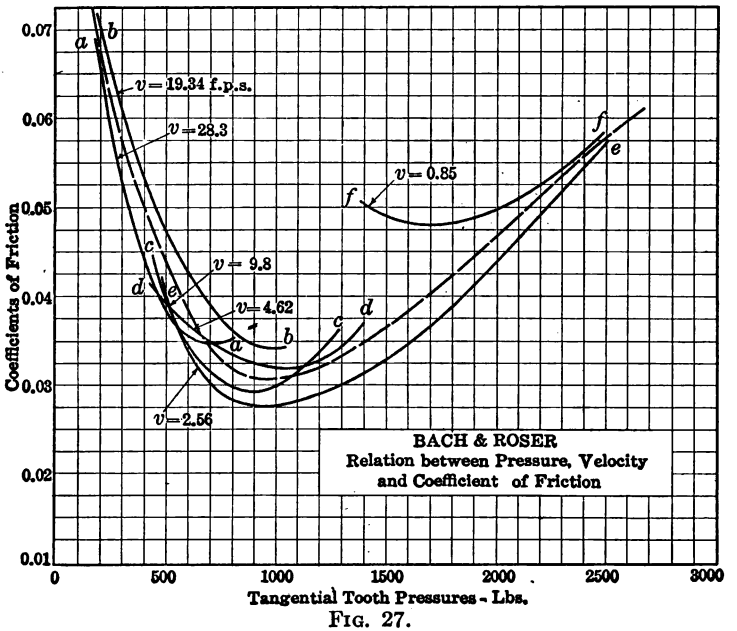

FIG. 27.

was established. The mechanism being set in motion by hand, weights were added to the cord on the worm drum until a constant speed of rotation could be maintained.

On substituting heavier weights, it was found that a greater weight was needed to keep the wheels in motion, and, several observations being thus made, a number of values were obtained for the weight necessary to maintain uniform motion with different degrees of tooth pressure. Plotting these values at ordinates, upon tooth pressures as abscissæ, it was found that

Digitized by Google

FIG. 28.

Digitized by Google

these fell in a straight line as shown by the line *A* (Fig. 29) The observed points being

TABLE VII

Pressures x	Load to overcome friction y
2 lb.	3.75
4 lb.	4.75
8 lb.	6.75

It is evident that the loads y are the product of $x \times \mu$

$$\therefore y = x\mu$$

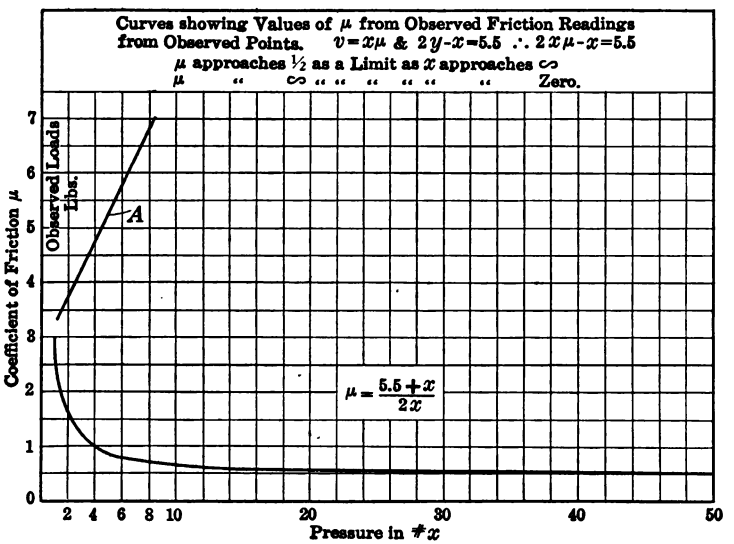

FIG. 29.

The equation to a straight line is

$$2y - x = 5.5$$
$$\therefore 2x\mu - x = 5.5$$
$$\text{so } \mu = \frac{5.5 + x}{2x}$$

Fig. 29 shows the curve to this equation giving values of μ for various pressures x, from which we see that

Digitized by Google

μ approaches .5 as a limit as x approaches ∞

μ approaches ∞ as a limit as x approaches o.

Turning again to Beauchamp Tower's experiments, the curves in Fig. 30 show the relationship between bearing pressures and μ for three different rubbing velocities, from which it is evident that the characteristic of the curve obtained from the entire axle is identical with these and consequently the rules deduced from Tower's experiments by Unwin for the variations of μ with pressures and speeds will apply equally to worm gears. This is highly important in all that follows.

Beauchamp Tower's observed figures for mineral oil bath lubrication.

Frictional resistance $R = \mu P = PC\sqrt{\frac{v}{P}}$

Mean value of C for mineral oil .27

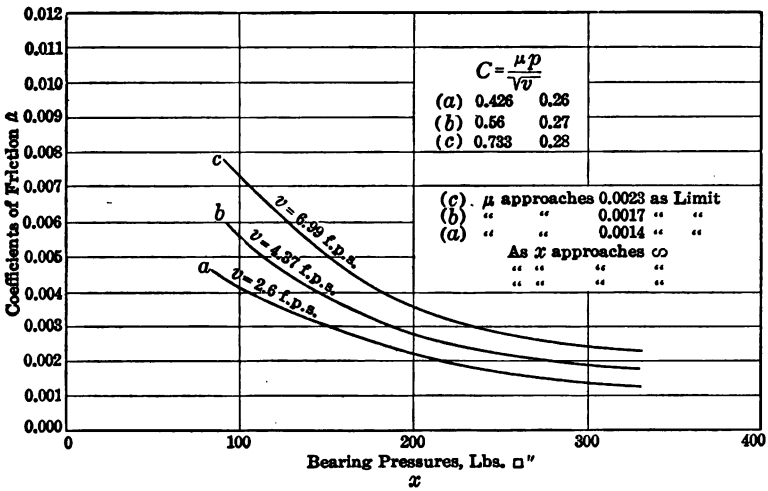

FIG. 30.

It will at once be objected that the values of μ obtained by experiment are much greater than .002; the reason for this is very plain. In the axle, as tested, there was the friction of the ball bearings supporting the worm and the worm wheel, and also the friction of the roller bearings on which the heavy road wheels were mounted on the axle tubes; this friction would undoubtedly be a constant, following Unwin's rule, and the total resistance to be overcome by the falling weight is thus

Digitized by Google

$\mu+c$. We are not much concerned with this constant since it includes all losses in addition to the worm losses proper, but the point has now been proved that the sliding friction of worm gear is substantially the same as the sliding friction of a journal in its bearing. and we are, therefore, justified in assuming the same specific value for μ as in the case of a journal.

We will, therefore, retain the value of

$$\mu = .002 = \tan \varphi = \tan 7' \qquad (75)$$

and presently show that this is correct.

The losses in a worm gear may be demonstrated graphically in the following manner: We may first consider the worm as a continuous inclined plane and the teeth of the worm wheel as the weight which is to be raised up this plane by the forcing of the plane under the weight in a direction parallel to the base of the plane. Fig. 31 demonstrates this.

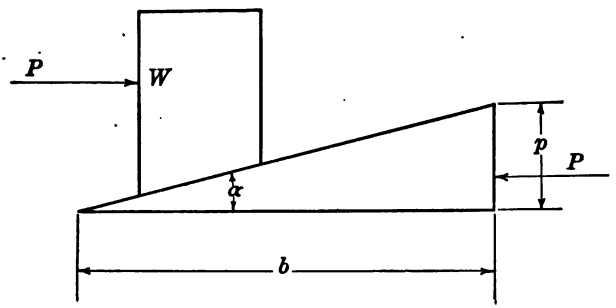

FIG. 31.

Taking the ordinary formula for finding the force P if friction be neglected $P = W\frac{p}{b} = W \tan a$. It is immaterial whether the weight be moved up the plane or the plane slid under the weight, since P and p are force and reaction. Taking friction into account $P = W \tan (\alpha+\phi)$ where ϕ is the angle of repose corresponding to the coefficient of friction. Since it has been assumed that the coefficient of friction is .002, it follows that the angle of which this is the tangent is 7'. The following table shows the values of W for different degrees of the pitch angle.

Digitized by Google

TABLE VIII

α = angle of lead	$\alpha + \phi$	$\tan(\alpha+\phi)$	$P = W \tan(\alpha+\phi)$ where $W = 1{,}000$	$W = \frac{P}{\tan(\alpha+\phi)}$ where $P = 1000$	Lead per 1 in. dia.
10°	10°7′	.1784	178.4	5609.	.1763
15°	15 7	.2701	270.1	3700.	.2679
20°	20 7	.3662	366.2	2732.	.3639
25°	25 7	.4687	468.7	2133.	.4663
30°	30 7	.5800	580.0	1724.	.5773
35°	35 7	.7032	703.2	1422.	.7000
40°	40 7	.8425	824.5	1185.	.8390
45°	45 7	1.0040	1004.0	996.	1.0000
50°	50 7	1.1966	1196.6	835.	1.1917
55°	55 7	1.4343	1434.3	698.	1.4281
60°	60 7	1.7402	1740.2	575.	1.7320

The values given in column five would be correct but for the fact that they take no account of the work done in the form of friction, and are only indicative of the gain in power due to the reduction of the worm gearing, they are, however, correct for the angle of 45 degrees, as will presently be shown.

In Fig. 32 the parallelogram represents the developed surface of the worm, of which AA is the thread. The worm wheel is to be revolved in the direction LM. Since the teeth of the wheel and the thread of the worm are parallel to one another at the point of contact, it follows that the pressure between the two is at right angles to the thread surface. Let aB represent this force, then this may be resolved into two forces La and LB, of which the latter is the useful and the former the useless component. If the pitch of the worm is increased to CC, the pressure applied along the line gB can be resolved into gl and lB, of which LB is the useful component; Ba and Bg are by construction equal, and Bl is less than BL, hence the force which is available for turning the wheel decreases as the pitch is increased and conversely the useless component increases with the increasing angle.

Digitized by Google

BLa is a right angle triangle, of which *LBa* is an angle corresponding to the pitch angle. *Ba* is the force applied. *BL* is the useful force. The ratio of these two $\frac{BL}{Ba}$ is the cosine of the angle *LBa*. Up to this point, therefore, it would appear that, with a constant worm torque, the force available for turning the wheel would vary inversely as the cosine of the pitch angle. There is, however, another aspect which must

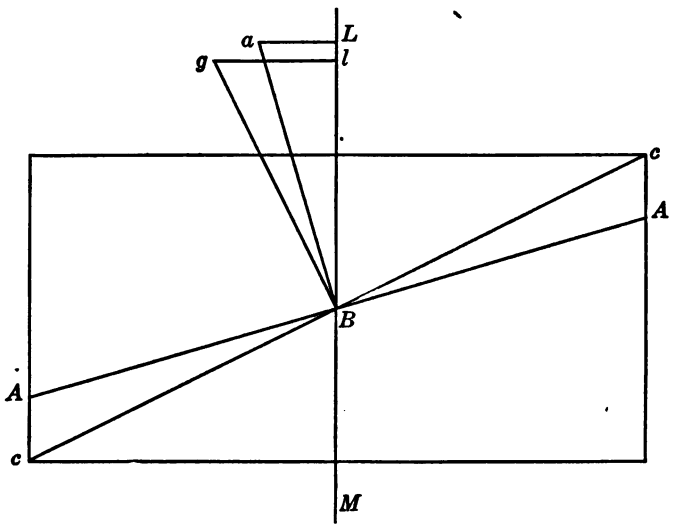

FIG. 32.

be considered, and it is the effect of the relative motion between the worm and wheel. Thus with *a* approaching zero value the relative motion between the two is very high compared to the useful motion of the worm wheel; hence much work is dissipated in useless friction.

Various formulæ have been proposed for determining the actual mechanical efficiency of worm gears, and so far as possible, these will be examined next.

We will take first, the much quoted formula developed by Professor Barr of Glasgow University:

$$\eta = \frac{\tan \alpha (1 - \mu \tan \alpha)}{\tan \alpha + 2\mu} \qquad (76)$$

Digitized by Google

For various angles of thread, α, the efficiencies have been plotted in column II table IX.

Next, Professor Unwin (Elements of Machine Design, Vol. 1, p. 423) gives the following:

$$\eta = \frac{1 - \mu \cot \alpha}{1 + \mu \tan \alpha} \tag{77}$$

Column III of the table gives these values.

Francis W. Davis, M.E., has proposed the following:

$$\eta = 1 - \mu \left(\frac{1}{\cos \alpha \sin \alpha + \mu \cos^2 \alpha} \right) \tag{78}$$

Comparing this equation with (77), it will be noted that Unwin's may be written

$$\eta = 1 - \frac{\mu(\cot \alpha + \tan \alpha)}{1 + \mu \tan \alpha} \tag{79}$$

and this becomes

$$\eta = 1 - \mu \left(\frac{1}{\cos \alpha \sin \alpha + \mu \sin^2 \alpha} \right) \tag{80}$$

very closely resembling (78). The values of μ in this equation are given in Column IV.

It must be observed here that neither of the above formulæ takes into account the pressure angle, and this undoubtedly exercises a considerable influence upon the efficiency of the gear inasmuch as it very largely governs the normal tooth pressure, quite irrespective of the torque. See equation 43, Chapter VII.

The force of friction in the gears is equal to $\mu \times p'$, and this force tends to resist the gliding of the worm over the wheel tooth. It is evident that the path along which the gliding occurs is a helical line wound around a cylinder whose diameter equals the pitch diameter of the worm, and the length of this path is l, the length of thread per revolution measured at the pitch line. See equation 15, Chapter IV. The work lost in friction equals in foot pounds

$$\frac{\mu p' l \rho}{12} \tag{81}$$

Digitized by Google

The work put into the worm is

$$\frac{T\pi d\rho}{12} \tag{82}$$

Hence, the efficiency is

$$\eta = 1 - \left(\frac{\mu p' l}{T\pi d}\right) \tag{83}$$

and $$l = \pi d \sec \alpha$$

so $$\eta = 1 - \left(\frac{\mu p' \pi d \sec \alpha}{T\pi d}\right) = 1 - \left(\frac{\mu p' \sec \alpha}{T}\right) \tag{84}$$

Substituting the value already found for p', we get (43)

$$\eta = 1 - \left(\frac{\mu\sqrt{\left(T \cot \alpha \tan \frac{\Psi}{2}\right)^2 + \left(\frac{T}{\sin \alpha}\right)^2 \times \sec \alpha}}{T}\right) \tag{85}$$

This may be written

$$\eta = 1 - \frac{\mu}{\sin \alpha \cos \alpha}\sqrt{1 + \cos^2 \alpha \tan^2 \frac{\Psi}{2}} \tag{86}$$

In the author's opinion, this is the most accurate formula of the four examples, and the values are given in column V of the table up to the equivalent lead angle of 45 degrees.

TABLE IX.—EFFICIENCIES OF WORM GEARING FOR VARIOUS ANGLES OF LEAD

I	II	III	IV	V
α	η	η	η	η
15°	98.5	99.2	99.2	99.0
20°	98.68	99.39	99.38	99.3
25°	98.8	99.50	99.45	99.4
30°	99.0	99.52	99.54	99.4
35°	99.5	99.59	99.56	99.53
40°	99.5	99.62	99.59	99.56
45°	99.5	99.63	99.60	99.58
50°	99.5	99.63	99.59	.....
55°	99.5	99.61	99.55	.....
60°	99.5	99.58	99.54	.....
65°	99.5	99.50	99.45	.....
70°	99.3	99.40	99.38	.....

Digitized by Google

It is clear, therefore, that for all usual lead angles as employed in automobile gears, the efficiency is over 99.5 per cent. and the conclusion is that the whole question of efficiency is one of the simple equivalent of the work put into the worm minus that absorbed by friction, and may, for all practical purposes, be expressed thus for all usual angles

$$\eta = \frac{1-\mu}{1} \tag{87}$$

Numerically, this is $\frac{.998}{1} = 99.8$ per cent.

Some apology is due to the reader for introducing so simple an expression as the outcome of so cumbersome an amount of preliminary calculation. The author feels, however, that having regard to the high percentage of efficiency this formula gives, it would hardly be accepted by engineers unless the previous proof were inserted; the demonstration is thus rendered complete.

It may be pointed out that if the table be extended in both directions, completing the series of values of α from 0° to 90°, it will be found that at both limits the value of η is zero, which is so obvious as to need no elaboration further than to observe that if $\alpha = 0°$ or 90°, there will be no movement of the worm wheel.

Practical corroboration of these values of η has been indisputably furnished by the long series of experiments conducted by Messrs. Brown & Sharpe, and published as a memorandum by Professor Kennerson in the Transactions of the American Society of Mechanical Engineers, 1912, where *average* values of η for the entire worm gear, including the friction of all the bearings, amount to over 97 per cent.,[1] and in two instances in the series of experiments, the records of which the author has been privileged to see, *readings were obtained of* 99.8 *per cent.*

The efficiencies given in column V of Table IX may, therefore, be accepted as representing what may with care be obtained in practical working, provided the workmanship is

[1] Also corroborated by Nat. Phys. Lab., London in tests on Daimler worm-gear, Nov., 1912, (see *aute*).

Digitized by Google

good, and the mounting and lubrication of the gears properly carried out.

The late Mr. Briggs, of Philadelphia, says in regard to friction, "It is established that for ordinary ratio of wheel to worm, say not to exceed 60 or 80 to 1, *well-fitted worm gear will transmit motion backward through the worm, exhibiting a lower coefficient of friction than is found in any other description of running machinery.*"

The selection of .002 as the value of the coefficient of friction, earlier in this chapter is thus justified.

See Appendix B.

Digitized by Google

CHAPTER XI

GENERAL POINTS OF DESIGN OF MOUNTING.

The design of the worm and wheel have now been fully considered, and the stresses set up in the various bearings investigated to the point where the designer is in possession of all the information to enable him to design the casing in which the gears will work. For a worm gear which is to work stationary machinery the provision of a suitable casing is a comparatively simple matter the only conditions being rigidity and the provision of an oil-tight casing to carry the lubricant. The quality of rigidity must be insisted upon to ensure the maintenance of the correct relative positions of the worm and wheel under the heavy stresses to which they are subjected. Weight in such cases is of secondary importance and metal need not be spared to ensure the desired end. The casing moreover will in such a case be bolted securely to a solid foundation which greatly facilitates matters.

Very different are the conditions in an automobile axle where weight must be saved at any cost, and strength and lightness have both to be studied.

In the days of the first Lanchester Car, 8 H.P. was all that had to be provided for, and the weight of the car was but a few hundred pounds. Recent worm gears the author designed are capable of transmitting 90 H.P. in a fast pleasure car which weighs over three tons with a load of seven passengers and their luggage; at the time of writing it is believed that these gears are considerably more powerful than any others working in automobiles, although their size is by no means excessive. It may well be imagined that the provision of a rigid case for these is something of a problem; the result has, however, proved entirely satisfactory.

In the first place there is the question of whether the worm shall be placed above or below the wheel. This subject has

Digitized by Google

been discussed by different makers as though it were a matter of great moment; in reality it is of no consequence whatever, and is purely to be governed by the expediency of other factors in the general design. Much more important is the design of the axle casing. Based no doubt upon bevel gear practice, the casing was originally made in two halves, each containing half the bearings required to support the differential, which were bolted together around the center, the portion of the case containing the worm was also in halves, being in fact an extension of the main casting. Perfectly satisfactory axles have been built on this plan but the difficulties of assembling are very great as neither the worm nor the wheel can be seen after they are mounted in position. A more modern type is shown in Fig. 33 which is an illustration of a rear axle of a five-ton commercial vehicle, here reproduced by permission of the Pierce-Arrow Motor Car Company. It will be seen that the axle proper is a pan-shaped casting, with elongations which carry the steel tubular extensions on which the road wheels are mounted. At the outset therefore a very rigid structure is provided for preserving the true alignment of the driving shafts. The worm and the wheel are mounted in a single casting, provided with strongly ribbed brackets for carrying the bearings of the worm wheel, the whole forming the lid of the axle case proper. By this arrangement the assembling of the gears and their exact adjustment can be carried out on the bench with the worm and wheel in full view, giving every facility to the erector for correct location in their relative positions; such a method also enables an accurate machining operation to be carried out upon the main bearings of the gear, and, when examination is necessary, it can be made without disturbing any adjustments, the entire system of worm wheel, and differential with all their bearings being lifted out in one piece for the purpose.

Much latitude is permissible to the designer, who has a wide field of arrangements to select from; it must always be remembered that the stresses in the parts supporting the bearings are high, but with the use of the diagram, Fig. 19, they may be determined at a glance, and a selection of suitable ball bearings can be made.

Digitized by Google

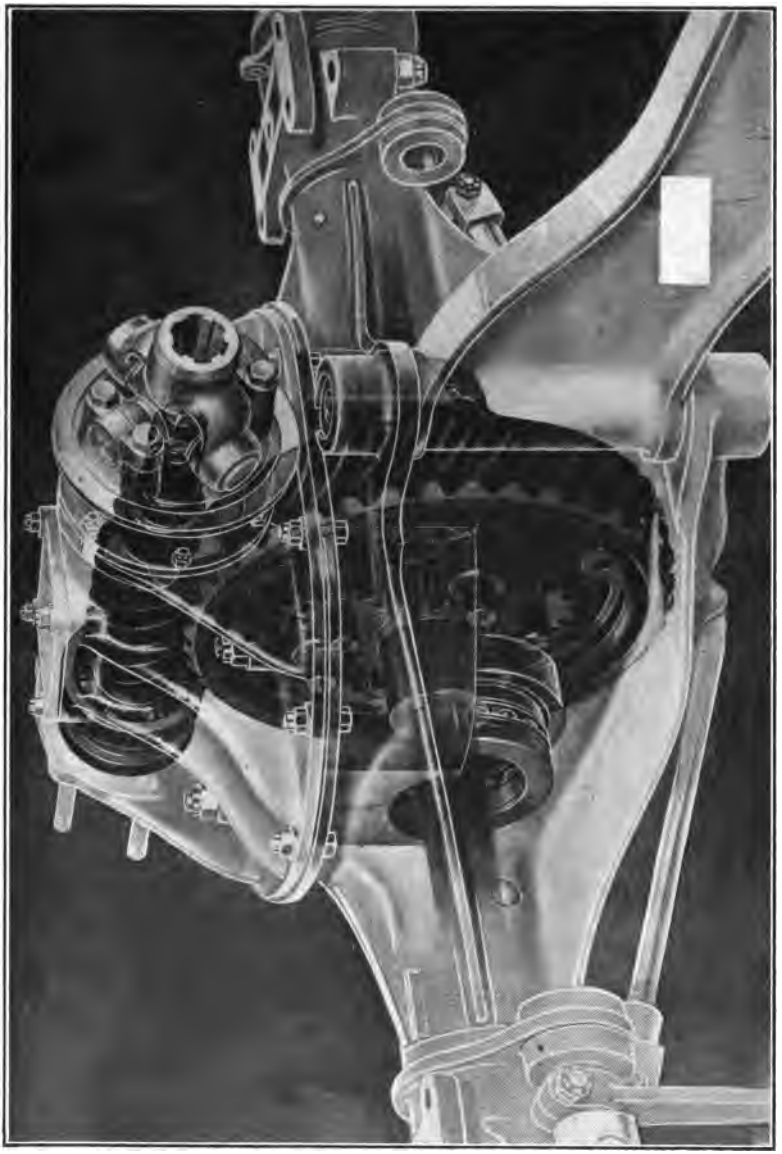

FIG. 33.

Digitized by Google

It may be observed that in the case of a straight worm, that is, one having a cylindrical pitch line, a double thrust bearing should be provided *at one end* (whichever is most convenient) the other end can then be left free to expand or contract with the difference of temperature which occurs when the worm is running. In the case of the hour-glass pattern worm, it is difficult to say what happens when it has to expand, presumably the casing expands too, and in that case a single thrust bearing at either end is the better arrangement.

Some designers provide a very heavy thrust bearing to take the forward drive and a relatively light one for the reverse—it is hard to see any justification for such an arrangement, since the reverse gear is almost invariably lower than the first speed forward, and the torque at the worm pitch line, and all the resultant pressures are in consequence heavier.

Provision must be made for oil to reach the thrust bearing at the rear of the worm when the latter is mounted above the wheel. The simplest way, and one which can be confidently recommended, is to bore the worm spindle through the center and drill small holes, say 3/16-in. diameter, radially into the hollow center, these holes being of course drilled between the threads of the worm before it is hardened. In the case of a large worm for high powered pleasure cars, this method has the added advantage of considerably lightening the worm, and the hollow in the spindle carries the oil back to the thrust bearing in a steady stream.

Provided precautions are taken to prevent the oil from leaking out through the arms of the axle, it will be found that the same oil may be used almost indefinitely—at any rate from 5000 to 7000 miles, and it may be observed that the oil level should be somewhat *below the center* of the casing. A small vent pipe may be provided if thought necessary, to allow for expansion of the air when the gears get warm, this will prevent the oil being forced out round the axles by any pressure so formed; such a pipe must, however, be closed by a cap drilled with a very small hole, say 1/16-in. diameter and the pipe should be loosely plugged with cotton to prevent the entrance of dust.

Digitized by Google

The author has intentionally refrained from elaborating to any extent upon the details of the casing, which are best left to the judgment of the designer; sufficient attention has, however, been drawn to the more important features to enable a satisfactory design to be produced if the principles set out in the earlier chapters of this book are closely followed. In conclusion, let it be pointed out that no workmanship can be too accurate in the manufacture of worm gearing, and unless facilities exist for this, a satisfactory result cannot be looked for. If, on the other hand, proper precautions are taken, a worm gear, correctly designed and mounted, is, as Mr. Briggs has observed, probably the most efficient piece of machinery known; and its efficiency is only equalled by its durability and silence of operation.

Digitized by Google

CHAPTER XII

RECAPITULATION OF FORMULÆ USED

$$\text{Gear ratio } G = \frac{\text{Wheel circumference}}{\text{worm lead}} \tag{1}$$

$$G = \frac{\pi D}{L} \tag{5}$$

Measurement of

(a) Axial pitch $= P$
(b) Normal pitch $P' = P \cos \alpha$
(c) Circumferential pitch $P'' = P \cot \alpha$ (2)

Circumference of worm $= \pi d = nP \cot \alpha$ (3)

$$\text{Number of threads on worm} = n = \frac{\pi d}{P \cot \alpha} \tag{4}$$

$$\text{Lead} = L = \frac{\pi D}{G} \tag{6}$$

$$L = Pn \tag{14}$$

Lead angle $= \alpha$

$$\tan \alpha = \frac{L}{\pi d} \tag{7}$$

$$\tan \alpha = \frac{D}{dG} \tag{8}$$

$$\tan \alpha = \frac{Pn}{\pi d} \tag{17}$$

Length of worm $= g$

$$g = 2R'' \sin \frac{\delta}{2} \tag{9}$$

Digitized by Google

Number of teeth in contact $= n'$

$$n' = \frac{g}{P} \tag{11}$$

$$n' = \frac{2R'' \sin \frac{\delta}{2}}{P} \tag{12}$$

Centers of worm and wheel $= c$

$$c = \frac{D+d}{2} \tag{13}$$

Length of thread per revolution of worm

$$= l = \pi d \sec \alpha \tag{15}$$

Rubbing velocity of worm $= v$

$$v = \frac{\pi d \sec \alpha \rho}{720} \text{ ft. per second} \tag{16}$$

Ratio between axial pressure angle θ and normal pressure angle Ψ

$$\tan \frac{\theta}{2} = \frac{\tan \frac{\Psi}{2}}{\cos \alpha} \tag{19}$$

$$\tan \frac{\Psi}{2} = \tan \frac{\theta}{2} \cos \alpha \tag{20}$$

Normal tooth pressure $= p'$

$$p' = \frac{T}{\sin (\alpha + \phi)} \tag{25}$$

$$p' = \frac{T}{\cos \chi} \tag{26}$$

$$p' = \frac{T}{\sin (90° - \chi)} \tag{27}$$

$$p' = \sqrt{\left(T \cot \alpha \tan \frac{\Psi}{2}\right)^2 + \left(\frac{T}{\sin \alpha}\right)^2} \tag{43}$$

Digitized by Google

Resultant normal pressure angle $= z$

$$\tan z = \cos \alpha \tan \frac{\Psi}{2} \tag{46}$$

Tangential tooth pressure (due to tractive resistance)

$$= p = \frac{w \mu R'}{R} \tag{28}$$

Length of wheel tooth $= \lambda$

$$\lambda = \frac{l \beta}{360} \tag{29}$$

Safe load on wheel tooth $= x$

$$x = 2.2\, l \beta P \tag{34}$$

Worm end thrust $= p$

$$p = T \cot \alpha \tag{49}$$

Separating force between worm and wheel $= f$

$$f = T \cot \alpha \tan \frac{\Psi}{2} \tag{53}$$

Radial thrust on worm bearings $= S$

$$S = \sqrt{\left(T \cot \alpha \tan \frac{\Psi}{2}\right)^2 + T^2} \tag{56}$$

Subtended angle of worm $= \beta$

$$\beta = \frac{p'}{2.2\, l P n'} \tag{59}$$

$$\beta = \frac{360\, g \tan \alpha}{\pi\, (d + .6366\, P)} \tag{64}$$

Tooth pressure velocity constant $= p'v$

$$p'v = 17000 \tag{67}$$

Heat generated in gears $= H$

$$H = \frac{p' \mu v\, 60}{778} \tag{68}$$

Digitized by Google

Area of axle surface required to dissipate heat $= a$

$$a = .635 \text{ sq. ft.} \tag{73}$$

Coefficient of friction $= \mu$

$$\mu = .002 = \tan \alpha = \tan 7' \tag{75}$$

Efficiency (accurate) $= \eta$

$$\eta = 1 - \frac{\mu}{\sin \alpha \cos \alpha} \sqrt{1 + \cos^2 \alpha \tan^2 \frac{\Psi}{2}} \tag{86}$$

Efficiency (approximate)

$$\eta = \frac{1-\mu}{1} \tag{87}$$

Digitized by Google

APPENDIX A

ALTERNATIVE METHOD OF CALCULATING STRESSES IN WORM GEARING

On page 25, a value of 60° is assumed for the axial included thread angle θ. The relationship between the axial included angle and the normal angle of the thread is shown in equation 20. In Fig. 19, page 45, the value of this angle is shown in the form of a curve for different lead angles assuming a constant value of 60° for the axial thread angle. A study of Fig. 19 shows that a different milling cutter would be required for every different value of the lead angle in order to produce a constant axial thread angle of 60°. For considerations of manufacturing, it is far easier and more economical to keep the *normal thread angle constant* at 60° by which means all the cutters would be ground to the same angle and the axial thread angle would be allowed to take care of itself. Moreover, although slightly increased by this method, the tooth pressures are not sensibly affected and the calculation becomes a much more simple matter. In the following figure (*a*), let *ab* be the axis of the worm; and *c*, *d*, *e*, *f*, the surface of the pitch line cylinder of the worm opened out flat, one thread of the worm being shown. Let Tx represent the magnitude of the torque; px will represent the normal pressure, and for a square thread, the magnitude of this will be expressed by

$$px = \frac{T}{\sin(\alpha + \varphi)} \text{ (25, Chapter V)}$$

φ can be omitted as being too small to make any practical difference. Let plane *c*, *d*, *e*, *f*, be viewed in perspective, as shown in the following figure (*b*).

Draw the perpendicular *pq* and make the angle *pxq*

Digitized by Google

equal to 30°, that is to say, equal to the pressure angle $\frac{\Psi}{2}$. Then the triangle pxq can be solved for xq by the following equation

$$xq = px \sec 30$$

$$px = \frac{T}{\sin \alpha}$$

Therefore,

$$xq = \frac{T \sec 30}{\sin \alpha}$$

and as sec 30° is a constant, the equation can be written

$$xq = \frac{1.1547T}{\sin \alpha} = p'$$

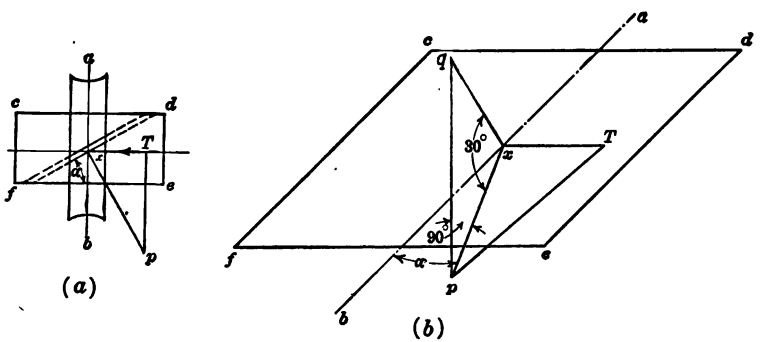

The following table gives the value of xq, the normal tooth pressure for various lead angles.

TABLE X

Lead angle	Tooth pressure. (T = 1 lb.)
15°	4.46
20°	3.375
25°	2.73
30°	2.31
35°	2.01
40°	1.795
45°	1.630

Digitized by Google

The other stresses shown in the diagram, Fig. 19, the end thrust of the worm, radial thrust of the worm, side thrust of the worm, and the separating forces are not affected.

Tooth pressure for 30° pressure angle may be written

$$T = \frac{63{,}024P}{n} \text{ inch lbs.}$$

d = pitch diameter

$.5d$ = pitch radius

As torque varies inversely with $.5d$, we get

$$T \text{ at pitch line} = \frac{63{,}024P}{n \times .5d} = \frac{126{,}048P}{nd}$$

and

$$p' = \frac{1.1547T}{\sin \alpha}$$

and substituting

$$p' = 1.1547 \times \frac{126{,}048 \times P}{nd \sin \alpha} = \frac{145{,}447P}{nd \sin \alpha}$$

Digitized by Google

Digitized by Google

APPENDIX B

EFFICIENCY OF WORM GEARING

Equation (84) gives the following value for the efficiency

$$\eta = 1 - \left(\frac{\mu p' \sec \alpha}{T}\right)$$

Substituting for p' the value obtained (from Appendix A), we get the following equation

$$\eta = 1 - \left(\frac{\mu \times 1.1547 \frac{T}{\sin \alpha} \times \sec \alpha}{T}\right)$$

This may be written

$$\eta = 1 - \left(\frac{.002 \times 1.1547 \times \frac{1}{\sin \alpha} \times \sec \alpha}{1}\right)$$

Or more simply

$$\eta = 1 - \left(.0023094 \frac{\sec \alpha}{\sin \alpha}\right)$$

This can, of course, be expressed empirically for any pressure angle as follows:

$$\eta = 1 - \left(\frac{\mu \sec \frac{\Psi}{2} \sec \alpha}{\sin \alpha}\right)$$

The efficiencies calculated by this formula are given in the second column of the following table:

Digitized by Google

TABLE XI

Lead angle	Efficiency
15°	99.076
20°	99.28
25°	99.39
30°	99.46
35°	99.508
40°	99.53
45°	99.539
50°	99.53

Basing his reasoning upon the relative velocity of the worm and the worm wheel, P. M. Heldt gives the following formula for efficiency:

$$\eta = \frac{\cos\frac{\Psi}{2} - \mu \tan \alpha}{\cos\frac{\Psi}{2} + \mu \cot \alpha}$$

It will be found that this formula gives precisely similar results to those given in the above table, assuming in both cases, at 30° pressure angle.

Digitized by Google

APPENDIX C

REVERSIBILITY

There is a very erroneous opinion that the reverse efficiency of any worm gear is considerably lower than the forward; that is to say that the efficiency is higher when the worm is driving the wheel than it is when the worm wheel drives the worm.

This misconception as to reverse efficiency, frequently referred to by writers on worm gearing, is due to the mistake almost invariably made in over-estimating the value of the coefficient of friction. From various experiments it has been substantiated that this value does not exceed .002 and is sometimes lower.

Again the pressure angle is cited by some as having a great effect in reversibility. As a matter of fact it will now be shown that the reverse efficiency is within six thousandths of 1 per cent. of the forward efficiency.

We will take the case first of a square thread, *i.e.*, one which has no pressure angle, and assume a pitch line torque of 1 lb. both forward and reverse (see Fig. 7, page 27).

Tooth pressure $p' = \dfrac{T}{\sin \alpha + \varphi}$ and $T = 1$.

so p' will be $\dfrac{1}{\sin \alpha + \varphi}$

neglect φ.

Then for the forward angles we have the following backward angles and other functions as follows:

Digitized by Google

TABLE XII

Angles		Sin α	Sin ζ	Tooth pressures	
Forward $=\alpha$	Backward $=\zeta$			Forward $\frac{1}{\text{Sin } \alpha}$	Backward $\frac{1}{\text{Sin } \zeta}$
15	75	0.2588	0.9659	3.87	1.035
20	70	0.3420	0.9396	2.92	1.065
25	65	0.4226	0.9063	2.37	1.104
30	60	0.5000	0.8660	2.00	1.155
35	55	0.5735	0.8191	1.745	1.220
40	50	0.6427	0.7660	1.556	1.323
45	45	0.7071	0.7071	1.414	1.415
50	40	0.7660	0.6427	1.305	1.555

The efficiency is $\eta = 1 - \dfrac{\mu \sec \frac{\Psi}{2} \sec \alpha}{\sin \alpha}$ and since pressure angle $= 0$, the $\sec \frac{\Psi}{2}$ becomes 1, hence for a square thread

$$\eta = 1 - \left(\frac{\mu \sec \alpha}{\sin \alpha}\right)$$

TABLE XIII

	Angles	Sin	Sec	Sec/Sin	Efficiency, per cent.
Forward	15	0.2588	1.0352	4.00 $\times$0.002=0.00800	99.200
	20	0.3420	1.0641	3.11 0.00622	99.378
	25	0.4226	1.1033	2.61 0.00522	99.478
	30	0.5000	1.1547	2.308 0.004616	99.5494
	35	0.5735	1.2207	2.13 0.00426	99.574
	40	0.6427	1.3054	2.03 0.00406	99.594
Backward	45	0.7071	1.4142	2.00 0.00400	99.600
	50	0.7660	1.5557	2.03 0.00406	99.594
	55	0.8191	1.7434	2.13 0.00426	99.574
	60	0.8660	2.0000	2.308 0.004616	99.5494
	65	0.9063	2.3662	2.61 0.00522	99.478
	70	0.9396	2.9238	3.11 0.00622	99.378
	75	0.9659	3.8637	4.00 0.00800	99.200

Digitized by Google

Next take the case of the square thread but including the effect of friction (the value of φ).

We have at the following angles the values shown:

TABLE XIV

α	$\alpha+\varphi$	Sin	Sec	Sec/Sin	Efficiency, per cent.
15	15° 7′	0.2607	1.0358	3.97 ×0.002 =0.00794	99.206
30	30° 7′	0.5071	1.1560	2.280 0.00456	99.544
45	45° 7′	0.7085	1.4171	2.000 0.00400	99.600
60	60° 7′	0.8670	2.0070	2.310 0.00462	99.538
75	75° 7′	0.9664	3.8932	4.03 0.00806	99.194

This may for convenience be written:

TABLE XV

α	Efficiency, per cent.		Difference, per cent.
	Forward	Backward	
15	99.206	99.194	0.008
30	99.544	99.538	0.006
45	99.600	99.600	0.000

Lastly we will take into account both the friction and the pressure angle, assuming the usual value of 30° for this.

The efficiency is expressed as

$$\eta = 1 - \left(\mu \frac{\sec 30 \sec \alpha}{\sin \alpha}\right)$$

$$\text{or } \eta = 1 - \left(0.0023094 \frac{\sec \alpha}{\sin \alpha}\right)$$

Taking the values as in column 5, Table XIV, we obtain:

Digitized by Google

TABLE XVI

α	Sec/Sin	Efficiency, per cent.
15°	3.97×0.0023094 = 0.0091683	99.08317
30°	2.28 0.0052655	99.47345
45°	2.00 0.0046188	99.53812
60°	2.31 0.0053347	99.46653
75°	4.03 0.0093069	99.06931

which may be written:

TABLE XVII

α	Efficiency, per cent.		Difference, per cent.
	Forward	Backward	
15	99.083	99.069	0.014
30	99.473	99.466	0.007
45	99.538	99.538	0.000

Digitized by Google

INDEX

Addendum, 10, 16
Annealing worms, 7
Area of physical contact, 50, 52
Axial pitch of worm, 10

Bach and Roser, 60, 64
  β value of, 48
  β variations of, author's experiments, 52
Bronze alloy for worm wheel, 5
Brown & Sharpe, efficiency experiments, 74
Bruce, Robert A., deductions, 50

Case hardening, worms, 6
Casing, design of, 76
Centers of axes, 19
Circular pitch of wheel, definition of, 10
Circumferential pitch, definition of, 10

Daimler axle, test of, 33, 74
Dedendum, 10, 16
Dennis, early worm gear, 2

Efficiency, Daimler worm axle, 74, foot note.
  formula for, 72, 73, 74
  of worm gearing, 63 *et seq.*, 89

Forms of teeth, 29
Friction, Beauchamp Tower experiments, 63
  coefficient of, 63
  in axle, author's experiment, 67

Gear ratio, calculations for, 17
  definition of, 8
Gliding angle, 26
Globoid gear, 3

Hardness of materials used, 5, 6
Heat generated, 58
Hindley worm gear, 7, 8, 29
Hobbing, 6

Included angle, calculations of, 25
  of thread, definition of, 11
Interference of wheel teeth, 22

Kennerson, Professor, on Brown & Sharpe experiments, 74

Lanchester, early worm gear, 2, 8
  gear, 30
Lead angle, calculations for, 17, 19
  definition of, 10
  definition of, 9
  of worm, 19
Length of teeth, calculation of, 27
  of thread, 19
  of worm, definition of, 10
  determination of, 17
Lost work of worm, 21
Lubricating oil, 57

Manufacturing methods, 6, 7
Materials for worm gears, 5, 6
Mechanical efficiency, 72, 73, 74

Normal pitch, definition of, 10

Oil, film, 56
  lubricating, 57

Pierce-Arrow Motor Car Co. worm axles, 2, 77
Pitch, calculation of, 17
  in relation to horsepower, 14
  line of wheel, definition of, 9
  of worm, definition of, 10
  selection of, 13
Pressure angle, 22
  definition of, 11

Digitized by Google

Proportions of gears.

Rack, 8
Radiation of heat from axle, 59
Reversibility, 8, 23, 89
Rubbing velocity, 19

Screw, definition of, 1
Strength of bronze alloy, 5
of steel for worm, 6
of teeth, 34
Stresses in gears, 38–46, 85
Subtended angle, definition of, 11
Symbols, 11, 12

Temperature, coefficient, 58
maximum permissible, 58
of gears, 51
Teeth in contact, number of, 17
Thread, form of, 22
proportions of, 26
Threads, number of, 17
Tooth pressure, effect of varying, 62
pressures, calculations of, 28
Tower, Beauchamp, friction experiments, 63, 68
Tractive resistance, 34

Velocity, rubbing, effect of varying, 62
Viscosity of lubricant, 52

Width of worm wheel, 47
Worm gearing, definition of, 8
location of, 77
material for, 6
wheel, material for, 5
size, determination, 16

Digitized by Google

Digitized by Google

Digitized by Google

Digitized by Google

89089666671

B89089666671A

is book may be kept
FOURTEEN DAYS
A fine of TWO CENTS will be charged
for each day the book is kept overtime.

13 Oc'52			
DEC 20 '55			
MY 2 '[illegible]			
[illegible]			

DEMCO-291-B

Digitized by Google

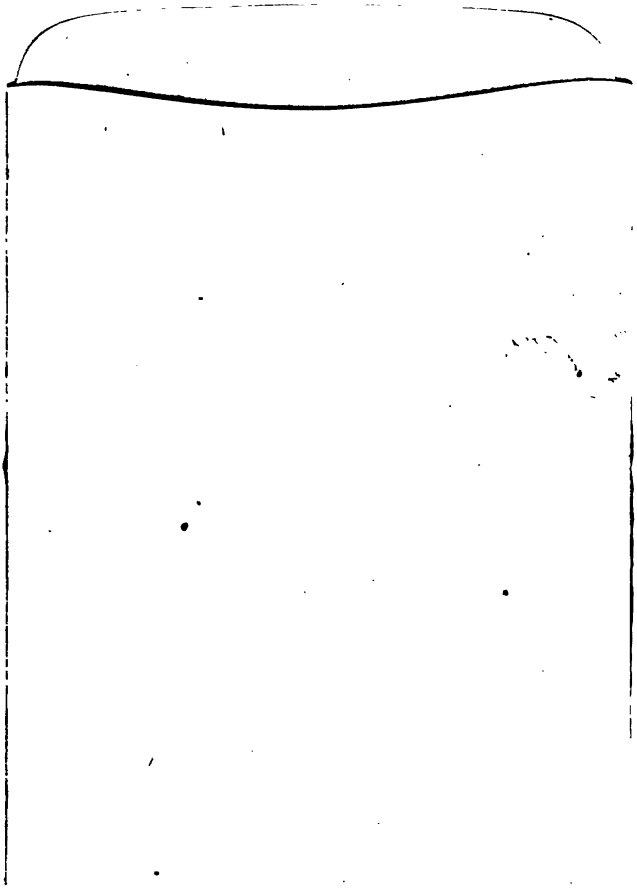

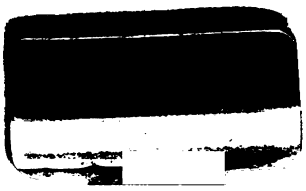

Digitized by Google

b89089666671a

Digitized by Google